BIDDING DOCUMENTS
FOR THE

BLANK TILE DRAIN

SAGINAW COUNTY PUBLIC WORKS COMMISSIONER
RICHLAND TOWNSHIP
SAGINAW COUNTY, MICHIGAN

Prepared By:
SPICER GROUP, INC.
SAGINAW, MICHIGAN
September, 2016

Plans Included

DR-2958 - 1 thru 5

Project ID No. 122848SG2015

TABLE OF CONTENTS

BIDDING AND CONTRACT REQUIREMENTS Page Nos.

Advertisement ..... AD - 1
Instructions to Bidders ..... IB-1 - 7
Bid Form ..... P-1 - 6
Act 524 (Retainage Rules) ..... A-1 - 5
Agreement ..... AGREE-1 - 5
Notice of Award ..... N/A - 1
Notice to Proceed ..... N/P - 1
General Conditions ..... GC-1 - 51
Insurance Coverage ..... I-1 - 2
MDOT Insurance Form 1
MDOT Notice to Surety/Insurance Companies 1
Change Order ..... CO - 1
Landowner Agreement ..... L/A - 1
Certificate of Substantial Completion ..... CSC-1 - 2

DIVISION 1 - GENERAL REQUIREMENTS

SECTION

01010 Summary of Work ..... 1010-1 - 1
01019 Contract Considerations ..... 1019-1 - 2
01039 Coordination and Meetings ..... 1039-1 - 4
01300 Submittals ..... 1300-1 - 2
01400 Quality Control ..... 1400-1 - 2
01500 Construction Facilities and Temporary Controls ..... 1500-1 - 3
01570 Traffic Regulation ..... 1570-1 - 3
01600 Material and Equipment ..... 1600-1 - 3
01700 Contract Closeout ..... 1700-1 - 2

DIVISION 2 - SITEWORK

SECTION

02110 Site Clearing ..... 2110-1 - 2
02160 Excavation Support Systems ..... 2160-1 - 2
02211 Rough Grading ..... 2211-1 - 3
02222 Excavation ..... 2222-1 - 3
02223 Backfilling ..... 2223-1 - 3
02225 Trenching ..... 2225-1 - 4
02274 Soil Erosion Prevention and Sedimentation Control ..... 2274-1 - 2
02279 Filter Fabric ..... 2279-1 - 2
02722 Site Storm Sewerage Systems ..... 2722-1 - 7
02923 Landscape Grading ..... 2923-1 - 2
02936 Seeding ..... 2936-1 - 3

DIVISION 3 - CONCRETE

SECTION

03001 Concrete .....3001-1 - 8

DIVISION 4 - MASONRY

SECTION

04100 Mortar .....4100-1 - 3

Appendix A – GWRR Occupancy License Agreement .....1 - 13
Appendix A – MDOT Standard Headwall Details .....1 - 2

ADVERTISEMENT

BLANK TILE DRAIN

SAGINAW COUNTY PUBLIC WORKS COMMISSIONER
SAGINAW COUNTY, MICHIGAN

Bids will be received by the office of the **SAGINAW COUNTY PUBLIC WORKS COMMISSIONER** at their office at 111 S. Michigan Avenue, Saginaw, MI, 48602, until 11:00 a.m. on the 20th day of October, 2016 for the **BLANK TILE DRAIN**. The following are approximate quantities with appurtenances:

STORM SEWER

1.	4	Each	5' Dia. M.H./C.B.
2.	20	Lin. Ft.	15" Dia. HP Storm Sewer
3.	565	Lin. Ft.	30" Dia. HP Storm Sewer
4.	8	Lin. Ft.	30" R.C.P. (C-76, Cl. IV)
5.	635	Lin. Ft.	36" Dia. HP Storm Sewer
6.	60	Lin. Ft.	36" Dia. R.C.P. (C-76, Cl. V) (Under Railroad)
7.	1	Each	Precast Concrete Outlet Headwall
8.	4	Each	Ditch Inlets (10' of 24" CMP) (Aluminized) (2 2/3" x 1/2" Corr., 16 Ga.)
9.	8	Each	Lateral Tile Connections
10.	1,268	Lin. Ft.	Spoil Leveling
11.	1	Lump Sum	Site Clearing

SOIL EROSION AND SEDIMENT CONTROL

12.	1	Lump Sum	Seeding, Fertilizing, and Mulching
13.	1	Lump Sum	Cleanup and Restoration

MISCELLANEOUS

14.	1	Lump Sum	Traffic Control

Each proposal shall be accompanied by certified check or bidder's bond in the amount of 5% of the bid. Checks shall be drawn payable to **Blank Tile Drain Drainage District** as security for the acceptance of the Contract and subject to the conditions stated in the Instructions to Bidders. **Payment and Performance Bonds will not be required.**

Plans, proposal forms and specifications may be obtained by qualified Bidders at no charge at the website of **the Saginaw County Public Works Commissioner,** http://www.saginawcounty.com/PublicWorks/Current-Projects.aspx beginning on the **3rd day of October, 2016**. Project to be completed by **December 16, 2016**. **The Owner intends on issuing the Notice to Proceed once crops are harvested from farm fields affected by the project.**

OWNER: SAGINAW COUNTY PUBLIC WORKS COMMISSIONER
BY: BRIAN J. WENDLING

INSTRUCTIONS TO BIDDERS

I. Defined Terms:

Terms used in these Instructions to Bidders, which are defined in the Standard General Conditions of the Construction Contract, have the meanings assigned to them in General Conditions. The term "Bidder" means one who submits a Bid directly to OWNER, as distinct from a sub-bidder, who submits a bid to a Bidder. The term "Successful Bidder" means the lowest, qualified, responsible and responsive Bidder to whom OWNER (on the basis of OWNER's evaluation as hereinafter provided) makes an award. The term "Bidding Documents" includes the Advertisement or Invitation to Bid, Instructions to Bidders, the Bid Form, and the proposed Contract Documents (including all Addenda issued prior to receipt of Bids). The term "Issuing Office" means the office from which the Bidding Documents are to be issued and where the bidding procedures are to be administered.

II. Copies of Bidding Documents:

A. Complete sets of the Bidding Documents in the number and for the deposit sum, if any, stated in the Advertisement or Invitation to Bid may be obtained from Professional. The deposit will not be refunded.

B. Complete sets of the Bidding Documents must be used in preparing Bids; neither OWNER nor Professional assume any responsibility for errors or misinterpretations resulting from the use of incomplete sets of Bidding Documents.

C. OWNER and Professional in making copies of Bidding Documents available on the above terms do so only for the purpose of obtaining Bids on the Work and do not confer a license or grant for any other use.

III. Qualifications of Bidders:

To demonstrate qualifications to perform Work, each Bidder must be prepared to submit within five days of OWNER's request written evidence, such as financial data, previous experience, present commitments and other such data as may be called for below (or in the Supplementary Conditions). Each bid must contain evidence of Bidder's qualification to do business in the state where the Project is located or covenant to obtain such qualification prior to award of contract.

IV. Examination of Contract Documents and Site:

A. It is the responsibility of each Bidder before submitting a Bid to:

1. To examine the Contract Documents thoroughly and other related data identified in the Bidding Documents (including "technical data" referred to below);

2. To visit the site and to become familiar with and satisfy Bidder as to the general, local and site conditions that may affect cost, progress, performance or furnishing of the Work;

3. To consider federal, state and local Laws and Regulations that may affect cost, progress, performance or furnishing of the Work;

4. To study and carefully correlate Bidder's knowledge and observations with the Contract Documents and such other related data and;

5. To promptly notify Professional of all conflicts, errors, ambiguities, or discrepancies, which Bidder has discovered in or between the Contract Documents and such other related documents.

B. Reference is made to the Supplementary Conditions, if applicable, for identification of:

1. Those reports of explorations and tests of subsurface conditions at or contiguous to the site which have been utilized by Professional in preparation of the Contract Documents. Bidder may rely upon the general accuracy of the "technical data" contained in such reports but not upon other data, interpretations, opinions or information contained in such reports or otherwise relating to the subsurface conditions at the site, nor upon the completeness thereof for the purposes of bidding or construction.

2. Those drawings of physical conditions in or relating to existing surface and subsurface structures (except Underground Facilities) which are at or contiguous to the site that have been utilized by Professional in preparation of the Contract Documents. Bidder may rely upon the accuracy of the "technical data" contained in such drawings but not upon other data, interpretations, opinions or information shown or indicated in such drawings or otherwise relating to such structures, nor upon the completeness thereof for the purposes of bidding or construction.

3. OWNER will make copies of such reports and drawings available to any Bidder on request. Those reports and drawings are not part of the Contract Documents. Bidder is responsible for any interpretation or conclusion drawn from any "technical data" or any such data, interpretations, opinions or information.

C. Information and data reflected in the Contract Documents with respect to Underground Facilities at or contiguous to the site is based upon information and data furnished to OWNER and Professional by owners of such Underground Facilities or others, and OWNER does not assume responsibility for the accuracy or completeness thereof unless it is expressly provided otherwise in the Supplementary Conditions.

D. Provisions concerning responsibilities for the adequacy of data furnished to prospective Bidders on subsurface conditions, underground facilities and other physical conditions, and possible changes in the Contract Documents due to differing conditions appear in Paragraphs 4.2 and 4.3 of the General Conditions.

E. Before submitting a Bid, each Bidder will, at Bidder's own expense, make or obtain any additional examinations, investigations, explorations, test and studies and obtain any additional information and data which pertain to the physical conditions (surface, subsurface and Underground Facilities) at or contiguous to the site or otherwise which may affect cost, progress, performance or furnishing of the Work or which relate to any aspect of the means, methods, techniques, sequences or procedures of construction to be employed by Bidder and safety precautions and programs incident thereto or which Bidder deems necessary to determine its Bid for performing and furnishing the Work in accordance with the time, price and other terms and conditions of the Contract Documents.

F. On request in advance, OWNER will provide each Bidder access to the site to conduct such explorations, examinations, investigations, studies, and tests as each Bidder deems necessary for submission of a Bid. Bidder shall fill all holes, clean up and restore the site to its former condition upon completion of such activities.

G. The lands upon which the Work is to be performed, rights-of-way and easements for access thereto and other lands designated for use by CONTRACTOR in performing the Work are identified in the Contract Documents. All additional lands and access thereto required for temporary construction facilities or storage of materials and equipment are to be provided by CONTRACTOR. Easements for permanent structures or permanent changes in existing structures are to be obtained and paid for by OWNER unless otherwise provided in the Contract Documents.

H. The submission of a Bid will constitute an incontrovertible representation by Bidder that Bidder has complied with every requirement of this Article 4, that without exception the Bid is premised upon performing and furnishing the Work required by the Contract Documents and the specific means, methods, techniques, sequences or procedures of construction as may be shown or indicated in or expressly required by the Contract Documents, and the Bidder has given Professional written notice of all conflicts, errors, ambiguities, and discrepancies that Bidder has discovered in the Contract Documents and the written resolutions thereof by Professional is acceptable to Bidder, and that the Contract Documents are generally sufficient to indicate and convey understanding of all terms and conditions for performing and furnishing the Work.

V. **Interpretations and Addenda:**

A. All questions about the meaning or intent of the Contract Documents are to be directed to Professional. Interpretations or clarifications considered necessary by Professional in response to such questions will be issued by Addenda via email and publication on the Owner's website to all parties recorded by Professional as having received the Bidding Documents. Questions received less than three days prior to the date for opening of Bids may not be answered. Only questions answered by formal written Addenda will be binding. Oral and other interpretations or clarifications will be without legal effect.

B. OWNER or Professional may also issue addenda to modify the Bidding Documents as deemed advisable.

VI. **Bid Security:**

A. Each Bid must be accompanied by Bid security made payable to Blank Tile Drain Drainage District in an amount of five percent of the Bidder's maximum Bid price and in the form of a certified check or a Bid Bond issued by a surety meeting requirements of Article 5, Bonds and Insurance, Paragraph 5.1, of the General Conditions section of the Bidding Documents.

B. The Bid security of the Successful Bidder will be retained until such Bidder has executed the Agreement and furnished the required contract security and met the other conditions of the Notice of Award, whereupon the Bid security will be returned. If the Successful Bidder fails to execute and deliver the Agreement and furnish the required contract security within fifteen days after the Notice of Award, OWNER may annul the Notice of Award and the Bid security of that Bidder will be forfeited. The Bid security of other Bidders whom OWNER believes to have a reasonable chance of receiving the award may be retained by OWNER until the earlier of the seventh day after the Effective Date of the Agreement or one day longer than Bid hold period after the Bid opening, whereupon Bid security furnished by such Bidders may be returned.

VII. **Contract Time:**

The numbers of days within which, or the dates by which, the Work is to be substantially completed and also completed and ready for final payment (the Contract Time is defined in the General Conditions) are set forth in the Bid Form and the Agreement.

VIII. **Liquidated Damages:**

Provisions for liquidated damages, if any, are set forth in the Agreement.

IX. **Substitute or "Or-Equal" Items:**

A. The materials and equipment described in the Bidding Documents establish a standard of required type, function, and quality to be met by any proposed substitute or "or-equal" item. No item of material or equipment will be considered by Professional as a substitute or "or-equal" unless written request for approval has been submitted by Bidder and has been received by Professional at least fifteen days prior to the date for receipt of Bids. Each such request shall include the name of the material or equipment for which it is to be substituted and a complete description of the proposed item including drawings, cuts, performance and test data and any other information necessary for an evaluation. A statement setting forth any changes in other materials, equipment or Work that incorporation of the proposed item would require shall be included. The burden of proof of the merit of the proposed item is upon Bidder. Professional's decision of approval or disapproval of a proposed item, such approval will be set forth in an Addendum issued to all prospective Bidders. Bidders shall not rely upon approvals made in any other manner.

IX. **Subcontractors, Suppliers and Others:**

A. If the OWNER requires the identity of certain Subcontractors, Suppliers and other persons and organizations (including those who are to furnish the principal items of material and equipment) to be submitted to OWNER in advance of a specified date prior to the Effective Date of the Agreement, the apparent Successful Bidder, and any other Bidder so requested, shall, within seven days after the Bid opening, submit to OWNER a list of all such Subcontractors, Suppliers, and other persons and organizations proposed for those portions of the Work for which such identification is required. An experience statement shall accompany such list with pertinent information regarding similar projects and other evidence of qualifications for each such Subcontractor, Supplier, person, or organization if requested by OWNER. An OWNER or Professional who, after due investigation, has reasonable objection to any proposed Subcontractor, Supplier, other person or organization, may on or before the Notice of Award is given, request the apparent Successful Bidder to submit an acceptable substitute, in which case the apparent Successful Bidder shall submit an acceptable substitute, that Bidder's Bid price will be increased (or decreased) by the difference in cost occasioned by such substitution and OWNER may consider such price adjustment in evaluating Bids and making the contract award. If apparent Successful Bidder declines to make any such substitutions, OWNER may award the contract to the next lowest Bidder that proposes to use acceptable Subcontractors, Suppliers and other persons and organizations. The declining to make requested substitutions will not constitute grounds for sacrificing the Bid security of any Bidder. Any Subcontractor, Suppliers, or other person or organization listed and to whom OWNER and Professional do not make written objection prior to the giving of the Notice of Award will be deemed acceptable to OWNER and Professional subject to revocation of such acceptance after the Effective Date of the Agreement as provided in Paragraph 6.8 of the General Conditions.

B. In contracts where the Contract Price is on the basis of Cost-of-the-Work Plus a Fee, the apparent Successful Bidder, prior to the Notice of Award, shall identify in writing to OWNER those portions of the Work that such Bidder proposes to subcontract and after the Notice of Award may only subcontract other portions of the Work with OWNER's written consent.

C. No CONTRACTOR shall be required to employ any Subcontractor, Supplier, other person or organization against whom CONTRACTOR has reasonable objection.

X. **Bid Form:**

A. The Bid Form is included with the Bidding Documents; additional copies may be obtained from Professional (or the issuing office). Unless noted otherwise in the Bid Form, only the Bid Form and its specified documents shall be submitted.

B. All blanks on the Bid Form must be completed in ink or by typewriter.

C. Bids by corporations must be executed in the corporate name by the president or a vice-president (or other corporate officer accompanied by evidence of authority to sign) and the corporate seal must be affixed and attested by the secretary or an assistant secretary. The corporate address and state of incorporation must be shown below the signature. Evidence of authority to conduct business as an out-of-state corporation in the state where the Work is to be performed shall be provided. State contractor license number, if any, must also be shown.

D. Bids by partnerships must be executed in the partnership name and signed by a partner, whose title must appear under the signature and the official address of the partnership must be shown below the signature.

E. All names must be typed or printed below the signature.

F. The Bid shall contain an acknowledgment of receipt of all issued Addenda (the numbers of which must be filled in on the Bid Form).

G. The address and telephone number for communications regarding the Bid must be shown.

H. The "Legal Status of Bidder" data must be filled out and included with the Bid Form.

XI. **Submission of Bids:**

A. Bids shall be submitted at the time and place indicated in the Advertisement or Invitation to Bid and shall be enclosed in an opaque sealed envelope, marked with the Project title (and, if applicable, the designated portion of the Project for which the Bid is submitted) and name and address of the Bidder and accompanied by the Bid security and other required documents. If the Bid is sent through the mail or other delivery system, the sealed envelope shall be enclosed in a separate envelope with the notation "BID ENCLOSED" on the face of it. Each prospective Bidder is furnished one copy of Bidding Documents with one separate unbound copy of each of the Bid Form and the Bid Bond. Bidder may retain the Bidding Documents. The unbound copy of the Bid Form is to be completed and submitted with the Bid security and other required documents. Faxed bids shall not be accepted.

XII. **Modification and Withdrawal of Bids:**

A. Bids may be modified or withdrawn by an appropriate document duly executed (in the manner that a Bid must be executed) and delivered to the place where Bids are to be submitted at any time prior to the opening of Bids.

B. If, within twenty-four hours after Bids are opened, any Bidder files a duly signed, written notice with OWNER and promptly thereafter demonstrates to the reasonable satisfaction of OWNER that there was a material and substantial mistake in the preparation of its Bid, that Bidder may withdraw its Bid and the Bid security will be returned. Thereafter, that Bidder will be disqualified from further bidding on the Work to be provided under the Contract Documents.

XIII. **Opening of Bids:**

Bids will be opened and (unless obviously non-responsive) read aloud publicly at the place indicated in the Advertisement or Invitation to Bid. An abstract of the amounts of the base Bids and major alternatives (if any) will be made available to Bidders after the opening of Bids.

XIV. **Bids to Remain Subject to Acceptance:**

All bids will remain subject to acceptance for ninety (90) days after the day of the Bid opening, but

OWNER may, in its sole discretion, release any Bid and return the Bid security prior to that date.

XV. **Award of Contract:**

A. OWNER reserves the right to reject any and all Bids, including without limitation the rights to reject any or all nonconforming, nonresponsive, unbalanced or conditional Bids and to reject the Bid of any Bidder if OWNER believes that it would not be in the best interest of the Project to make an award to that Bidder, whether because the Bid is not responsive or the Bidder is unqualified or of doubtful financial ability or fails to meet any other pertinent standard or criteria established by OWNER. OWNER also reserves the right to waive all informalities not involving price, time or changes in the Work and to negotiate contract terms with the Successful Bidder. Discrepancies between the multiplication of units of Work and unit prices will be resolved in favor of the unit prices. Discrepancies between the indicated sum of any column of figures and the correct sum thereof will be resolved in favor of the correct sum. Discrepancies between words and figures will be resolved in favor of the words.

B. In evaluating Bids, OWNER will consider the qualifications of the Bidders, whether or not the Bids comply with the prescribed requirements, and such alternates, unit prices and other data, as may be requested in the Bid Form or prior to the Notice of Award.

C. OWNER may consider the qualifications and experience of Subcontractors, Suppliers, and other persons and organizations proposed for those portions of the Work as to which the identity of Subcontractors, Suppliers, and other persons and organizations must be submitted as provided in the Bid Form. OWNER also may consider the operating costs, maintenance requirements, performance data and guarantees of major items of materials and equipment proposed for incorporation in the Work when such data is required to be submitted prior to the Notice of Award.

D. OWNER may conduct such investigations as OWNER deems necessary to assist in the evaluation of any Bid and to establish the responsibility, qualifications and financial ability of Bidders, proposed Subcontractors, Suppliers and other persons and organizations to perform and furnish the Work in accordance with the Contract Documents to OWNER's satisfaction within the prescribed time.

E. If the contract is to be awarded, it will be awarded to the lowest Bidder whose evaluation by OWNER indicates to OWNER that the award will be in the best interests of the Project.

F. If the contract is to be awarded, OWNER will notify the Successful Bidder during the Bid hold period.

XVI. **Contract Security and Insurance:**

Article 5.1 of the Bonds and Insurance section of the General Conditions set forth OWNER's requirements as to Insurances. When the Successful Bidder delivers the executed Agreement to OWNER, it must be accompanied by the required Insurance papers.

XVII. **Signing of Agreement:**

When OWNER gives a Notice of Award to the Successful Bidder, it will be accompanied by the required number of unsigned counterparts of the Agreement with all other written Contract Documents attached. Within fifteen days thereafter CONTRACTOR shall sign and deliver the required number of counterparts of the Agreement and attached documents to OWNER with the required Insurances. Thereafter, OWNER shall deliver one fully signed counterpart to CONTRACTOR.

XVIII. **Retainage:**

Provisions concerning retainage and CONTRACTOR's rights to deposit securities in lieu of retainage are set forth in the Agreement.

BID FORM
(Proposal)

A. **PROJECT IDENTIFICATION:** **BLANK TILE DRAIN**

B. **CONTRACT IDENTIFICATION AND NUMBER:** **122848SG2015**

C. **THIS BID IS SUBMITTED TO:** **SAGINAW COUNTY PUBLIC WORKS COMMISSIONER**
SAGINAW COUNTY, MICHIGAN

1. The undersigned BIDDER proposes and agrees, if this Bid is accepted, to enter into an agreement with OWNER in the form included in the Contract Documents to perform and furnish all Work as specified or indicated in the Contract Documents for the Contract Price and within the Contract Time indicated in the Contract Documents for the Bid Price and within the Bid Times indicated in this Bid and in accordance with the other terms and conditions of the Contract Documents.

2. BIDDER accepts all of the terms and conditions of the Advertisement or Invitation to Bid and Instructions to Bidders, including without limitation those dealing with the disposition of Bid security. This Bid will remain subject to acceptance during the Bid hold period. BIDDER will sign and deliver the required number of counterparts of the Agreement with the Bonds and other documents required by the Bidding Requirements within fifteen days after the date of OWNER's Notice of Award.

3. In submitting this Bid, BIDDER represents, as more fully set forth in the Agreement, that:

   a. BIDDER has examined copies of all the Bidding Documents and of the following Addenda. There is no Addendum Acknowledgment sheet; therefore, please acknowledge receipt of Addenda below:

      (BIDDER NOTE: Bidder shall fill in date and number of all addenda. If no addenda have been issued, insert "N/A".

Date of Issue	Addendum No.
_____	_____
_____	_____
_____	_____

   b. BIDDER has visited the site and conducted an examination of the area and become familiar with and is satisfied as to the general, local and site conditions that may affect cost, progress, performance and furnishing of the Work;

   c. BIDDER is familiar with and is satisfied as to all federal, state, and local Laws and Regulations that may affect cost, progress, performance, and furnishing of the Work.

   d. BIDDER has carefully studied all reports of explorations and tests of subsurface or physical conditions at or contiguous to the site and all drawings of physical conditions in or relating to existing surface or subsurface structures at or contiguous to the site (except Underground Facilities) which have been identified, if any, in the General Conditions as provided in paragraph 4.2.1. BIDDER accepts the determination set forth in paragraph 4.2.2 of the General Conditions of the extent of the "technical data" contained in such reports and drawings upon which BIDDER is entitled to rely as provided in paragraph 4.2 of the General Conditions. BIDDER acknowledges that such reports and drawings are not Contract Documents and may not be complete for BIDDER's purposes. BIDDER acknowledges that OWNER and Professional do not assume

responsibility for the accuracy or completeness of information and data shown or indicated in the Bidding Documents with respect to Underground Facilities at or contiguous to the site. BIDDER has obtained and carefully studied (or assumes responsibility for having done so) all such additional or supplementary examinations, investigations, explorations, tests, studies and data concerning conditions (surface, subsurface and Underground Facilities) at or contiguous to the site or otherwise which may affect cost progress, performance or furnishing of the Work or which relate to any aspect of the means, methods, techniques, sequences and procedures of construction to be employed by BIDDER and safety precautions and programs incident thereto. BIDDER does not consider that any additional examinations, investigations, explorations, tests, studies or data are necessary for the determination of this Bid for performance and furnishing of the Work in accordance with the times, price and other terms and conditions of the Contract Documents.

e. BIDDER is aware of the general nature of Work to be performed by OWNER and others at the site that relates to Work for which the Bid is submitted as indicated in the Contract Documents.

f. BIDDER has correlated the information known to BIDDER, information and observations obtained from visits to the site, reports and drawings identified in the Contract Documents and all additional examinations, investigations, explorations, tests, studies and data with the Contract Documents.

g. BIDDER has given PROFESSIONAL written notice of all conflicts, errors, ambiguities or discrepancies that BIDDER has discovered in the Contract Documents and the written resolution thereof by PROFESSIONAL is acceptable to BIDDER, and the Contract Documents are generally sufficient to indicate and convey understanding of all terms and conditions for performing and furnishing the Work for which this Bid is submitted.

h. This Bid is genuine and not made in the interest of or on behalf of any undisclosed person, firm or corporation and is not submitted in conformity with any agreement or rules of any group, association, organization or corporation; BIDDER has not directly or indirectly induced or solicited any other Bidder to submit a false or sham Bid; BIDDER has not solicited or induced any person, firm or corporation to refrain from bidding; and BIDDER has not sought by collusion to obtain for itself any advantage over any other Bidder or over OWNER.

4. BIDDER will complete the Work in accordance with the Contract Documents for the following price(s):

Item No.	Estimated Quantity	Unit	Description	Unit Price	Amount
STORM SEWER					
1.	4	Each	5' Dia. M.H./C.B.	$ _____	$ _____
2.	20	Lin. Ft.	15" Dia. HP Storm Sewer	$ _____	$ _____
3.	565	Lin. Ft.	30" Dia. HP Storm Sewer	$ _____	$ _____
4.	8	Lin. Ft.	30" R.C.P. (C-76, Cl. IV)	$ _____	$ _____
5.	635	Lin. Ft.	36" Dia. HP Storm Sewer	$ _____	$ _____
6.	60	Lin. Ft.	36" Dia. R.C.P. (C-76, Cl. V) (Under Railroad)	$ _____	$ _____
7.	1	Lump Sum	Railroad Track Removal and Reinstallation	Lump Sum	$ _____
8.	1	Each	Precast Concrete Headwall (36" Pipe)	$ _____	$ _____

9.	1	Each	Connect to Existing Storm Sewer	$ _____	$ _____
10.	4	Each	Ditch Inlets (10' of 24" CMP) (Aluminized) (2 2/3" x 1/2" Corr., 16 Ga.) (Bevel One End)	$ _____	$ _____
11.	8	Each	Lateral Tile Connections	$ _____	$ _____
12.	1,268	Lin. Ft.	Spoil Leveling	$ _____	$ _____
13.	1	Lump Sum	Site Clearing	Lump Sum	$ _____
SOIL EROSION AND SEDIMENT CONTROL					
14.	1	Lump Sum	Seeding, Fertilizing, and Mulching	Lump Sum	$ _____
15.	1	Lump Sum	Cleanup and Restoration	Lump Sum	$ _____
MISCELLANEOUS					
16.	1	Lump Sum	Railroad Flagman Allowance	Lump Sum	_____
17.	1	Lump Sum	Traffic Control	Lump Sum	$ _____
18.	8	Days	Inspection Days (Minimum)	$768.00	$ $6,144.00
19.	_____	Days	Inspection Days (Additional)	$768.00	$ _____

TOTAL AMOUNT OF BID---------- **$** _____

BIDDER acknowledges that quantities are not guaranteed and final payment will be based on actual quantities determined as provided in the Contract Documents. BIDDER acknowledges that progress payments will be based on the Payment Schedule as detailed in the Agreement.

5. BIDDER agrees that the Work will be substantially complete on or before **December 16, 2016** after the date when the Contract Times commence to run, as provided in paragraph 2.3 of the General Conditions, and completed and ready for final payment in accordance with paragraph 14.13 of the General Conditions on or before **June 12, 2017**.

   BIDDER accepts the provisions of the Agreement as to liquidated damages in the event of failure to complete the Work within the times specified in the Agreement.

6. In addition, BIDDER accepts:

   a. That the OWNER will provide, through the PROFESSIONAL, reference points for construction and the CONTRACTOR will be responsible for laying out (staking) the work sufficient for construction purposes in accordance with applicable parts of paragraph 4.4 of the General Conditions and the Supplementary Conditions.

   b. All inspection on this project will be performed by the PROFESSIONAL. The Contractor shall state in the proposal the number of inspection days required for the completion of this project.

      A required minimum number of Inspection has been shown in the proposal.

The Contractor is to bid the Additional Inspection if in his opinion the Inspection amount is not adequate, in which case the Contractor should write in the blank the total number additional inspection days he feels it will take to complete this project.

The total inspection day's fee bid will be part of the total contract price and will be considered to determine the low bidder on the project.

An inspection day shall be an **8**-hour day, Monday thru and including Friday and not a holiday day when an inspector or resident project representative is required to observe the following type of work.

1. Laying pipe and appurtenances.
2. Backfilling trenches.
3. Exploratory Excavation/Utility location.
4. Installing any manholes or catchbasins.
5. Setting of castings on manholes and catchbasins.
6. Making a road crossing and repairing a road crossing.

This is not intended to be an all inclusive list, but rather a mere sample.

The amount bid for inspection days shall not change through the course of the project unless by Change Order to the Contract for additional work and shall be prepared by the PROFESSIONAL.

Each progress payment shall include a section where the Contractor is paid the number of inspection days used up to the bid amount unless additional days have been added. The progress payment shall also have a section where the actual number of inspection days used shall be deducted from the Contractor's progress payment.

If the project is completed at the Inspection (Minimum Estimated by the Engineer) amount or under, the Inspection (Minimum Days Estimated by Engineer) amount shall be deducted from the Contract **and the remainder will be credited to the Contractor.**

If the project is completed at the Additional Inspection (Extra Days Estimated by Contractor) amount or under, the amount actually used, shall be deducted from the contract **and the remainder will be credited to the Contractor.**

The person doing the inspection and observation shall be known as the Resident Project Representative (RPR) whose limitations of authority and responsibilities are generally described in paragraph 9.13 of the General Conditions.

The CONTRACTOR shall be responsible for coordinating with the PROFESSIONAL the starting and stopping times of each workday. Any work performed by the CONTRACTOR without the Resident Project Representative will not be paid or shall be exposed, uncovered and witnessed that it was properly installed before recommendation for payment will be made.

Hours worked in excess of the **8** hour-day, a **40** hour work week; hours on Saturday, Sunday, or hours on a Holiday shall be charged at 1 ½ times **$96.00** per hour.

Show-up time for the Resident Project Representative will be charge at a minimum of two hours per day.

The inspector's daily report (IDR) shall reflect the exact hours to be charged to the Contractor for that particular day. The contractor shall receive copies of the weeks IDR the following Monday morning.

7. The following documents are attached to and made a condition of this Bid:

   a. Required 5% Bid Security in the form of Bid Bond or Certified Check.

b. If required, BIDDER's Qualification Statement with supporting data.

8. Communications concerning this Bid shall be addressed to: **Nicolas D. Czerwinski, P.E., Project Manager, 230 S. Washington, Saginaw, MI 48607-1286, Phone; (989) 754-4717; Fax; (989) 754-4440; nickc@spicergroup.com.**

9. Terms used in this Bid which are defined in the General Conditions or Instructions will have the meanings indicated in the General Conditions or Instructions.

10. Dated and signed at _____ State of _____

this _____ day of_____ 2016

Name of Bidder: _____

By: _____
(Authorized Officer's Name)

Its:_____
(Officer's Title)

Business Address: _____

_____
(Zip Code)

Telephone Number: (____)_____ Fax Number: (_____) _____

If BIDDER is: **(Note to BIDDER - Fill out appropriate section.)**

AN INDIVIDUAL

By_____
(Individual's Name)

doing business as_____

A PARTNERSHIP

By_____
(Firm Name)

_____
(General Partner)

A CORPORATION

By_____
(Corporation Name)

_____
(State of Incorporation)

By_____
(Name of Person Authorized to Sign)

_____
(Title)

(Corporate Seal)

Attest_____

Date of Qualification to do business is_____

A JOINT VENTURE

By_____
(Name)

_____
(Address)

By_____
(Name)

(Each joint venturer must sign. The manner of signing for each individual, partnership and corporation that is a party to the joint venture should be in the manner indicated above).

PROJECTS UNDER ACT NO. 524 OF PUBLIC ACTS OF 1980

General Information

1. Interest will be paid on retainage in accordance with the Act.

2. The Contractor may request reasonable interest on accounts past due on prior progress payments which can be included in the next request for payment.

3. Retainage will be in accordance with the Act, Subsections 3 and 4.

4. All matters described in Subsection 3 of the Act shall be submitted to the decision of an agent at the option of the Owner.

Retainage. The retainage for the project shall be as follows:

1. For projects with Payment Schedule No. 1, the retainage shall be in accordance with Act No. 524.

2. For projects with Payment Schedule No. 2, the retainage shall be ten percent (10%) of the contract price.

Payment. All requests for payment shall be in compliance with Act No. 524 of Public Acts of 1980. Construction contracts having a dollar value of less than $30,000 or a contract that provides for three or fewer payments shall be exempt from the Act.

The requests for payments shall be made in accordance with one of the following Payment Schedules:

Payment Schedules

1. Not later than the 25th day of each calendar month, the Owner will make partial payment to the Contractor on the basis of a duly certified, approved estimate of the work performed during the preceding calendar month by the Contractor, but the Owner will retain a percentage as stated in Act No. 524 of the amount of each such estimate until final completion and acceptance of all work covered by this contract.

2. Payment requests shall be limited to three or fewer payments less ten percent (10%) retained on each payment request, except for the final payment, which shall include all amounts previously retained. Payment requests will only be permitted after completion of fifty percent (50%) of the project, after seventy-five percent (75%) of the project and after one hundred percent (100%) of the project is completed and accepted. No payment request will be made within 30 consecutive days of a previous request.

Act No. 524

Public Acts of 1980

Approved by Governor

January 29, 1981

STATE OF MICHIGAN

80TH LEGISLATURE

REGULAR SESSION OF 1980

Introduced by Rep. Ryan

ENROLLED HOUSE BILL NO. 5541

AN ACT to provide for the terms of certain construction contracts with certain public agencies; to regulate the payment and retainage of payments on construction contracts with certain public agencies; and to provide for the resolution of certain disputes.

The People of the State of Michigan enact:

Sec. 1. As used in this act:

(a) "Agent" means the person or persons agreed to or selected by the contractor and the public agency pursuant to section 4(2).

(b) "Architect or professional engineer" means an architect or professional engineer licensed under Act No. 299 of the Public Acts of 1980, being sections 339.10 to 339.2601 of the Michigan Compiled Laws, and designated by a public agency in a construction contract to recommend progress payments.

(c) "Construction contract" or "contract" means a written agreement between a contractor and a public agency for the construction, alternation, demolition, or repair of a facility, other than a contract having a dollar value of less than $30,000.00 or a contract that provides for 3 or fewer payments.

(d) "Contract Documents" means the Construction Contract; Instructions To Bidders, Proposal; Conditions of the Contract; Performance Bond; Labor and Material Bond; Drawings; Specifications; all Addenda issued before execution of the construction contract and all modifications issued subsequently.

(e) "Contractor" means an individual, sole proprietorship, partnership, corporation, or joint venture that is a party to a construction contract with a public agency.

(f) "Facility" means a building, utility, road, street, boulevard, parkway, bridge, ditch, drain, levee, dike, sewer, park, playground, or other structure or work that is paid for with public funds or a special assessment.

(g) "Progress payment" means a payment by a public agency to a contractor work in place under the terms of a construction contract.

(h) "Public agency" means this state, or a county, city, township, village, assessment district, or other political subdivision, corporation, commission, agency, or authority created by law. However, public agency does not include the state transportation department, a school district, junior or community college, the Michigan state housing development authority created in Act No. 346 of the Public Acts of 1966, as amended, beings sections 125.1401 to 125.1496 of the Michigan Compiled Laws, and a municipal electric utility or agency. "Assessment district" means the real property within a distinct area upon which special assessments are levied or imposed for the construction, reconstruction, betterment, replacement or repair of a facility to be paid for by funds derived from those special assessments imposed or levied on the benefited real property.

(i) "Retainage" or "retained funds" means the amount withheld from a progress payment to a contractor pursuant to section 3.

Sec. 2

(1) The construction contract shall designate a person representing the contractor who will submit written requests for progress payments, and a person representing the public agency to whom requests for progress payments are to be submitted. The written requests for progress payments shall be submitted to the designated person in a manner and at such times as provided in the construction contract.

(2) The processing of progress payments by the public agency may be deferred by the public agency until work having a prior sequence, a provided in the contract documents, is in place and is approved.

(3) Each progress payment requested, including reasonable interest if requested under subsection (4), shall be paid within 1 of the following time periods, whichever is later.

(a) Thirty days after the architect or professional engineer has certified to the public agency that work is in place in the portion of the facility covered by the applicable request for payment in accordance with the contract documents.

(b) Fifteen days after the public agency has received the funds with which to make the progress payment from a department or agency of the federal or state government, if any funds are to come from either of those sources.

(4) Upon failure of a public agency to make a timely progress payment pursuant to this section, the person designated to submit requests for progress payments may include reasonable interest on amounts past due in the next request for payment.

Sec. 3

(1) To assure proper performance of a construction contract by the contractor, a public agency may retain a portion of each progress payment otherwise due as provided in this section.

(2) The retainage shall be limited to the following:

(a) Not more than 10% of the dollar value of all work in place until work is 50% in place.

(b) After the work is 50% in place, additional retainage shall not be withheld unless the public agency determines that the contractor is not making satisfactory progress, or for other specific cause relating to the contractor's performance under the contract. If the public agency so determines, the public agency may retain not more than 10% of the dollar value of work more than 50% in place.

(3) The retained funds shall not exceed the pro rata share of the public agency's matching requirement under the construction contract and shall not be commingled with other funds of the public agency and shall be deposited in an interest bearing account in a regulated financial institution in this state wherein all such retained funds are kept by the public agency which shall account for both retainage and interest on each construction contract separately. A public agency is not required to deposit retained funds in an interest bearing account if the retained funds are to be provided under a state or federal grant and the retained funds have not been paid to the public agency.

(4) Except as provided in section 4(7) and (8), retainage and interest earned on retainage shall be released to a contractor together with the final progress payment.

(5) At any time after 94% of work under the contract is in place and at the request of the original contractor, the public agency shall release the retainage plus interest to the original contractor only if the original contractor provides to the public agency an irrevocable letter of credit in the amount of the retainage plus interest, issued by a bank authorized to do business in this state, containing terms mutually acceptable to the contractor and the public agency.

Sec. 4

(1) The construction contract shall contain an agreement to submit those matters described in subsection (3) to the decision of an agent at the option of the public agency.

(2) If a dispute regarding a matter described in subsection (3) arises, the contractor and the public agency shall designate an agent who has background, training, and experience in the construction of facilities similar to that which is the subject of the contract, as follows:

(a) In an agreement reached within 10 days after a dispute arises.

(b) If an agreement cannot be reached within 10 days after a dispute arises, the public agency shall designate an agent who has background, training, and experience in the construction of facilities similar to that which is the subject of the contract and who is not an employee of the agency.

(3) The public agency may request dispute resolution by the agent regarding the following:

(a) At any time during the term of the contract, to determine whether there has been a delay for reasons that were within the control of the contractor, and the period of time that delay has been caused, continued, or aggravated by actions of the contractor.

(b) At any time after 94% of work under the contract is in place, whether there has been an unacceptable delay by the contractor in performance of the remaining 6% of work under the contract. The agent shall consider the terms of the contract and the procedures normally followed in the industry and shall determine whether the delay was for failure to follow reasonable and prudent practices in the industry for completion of the project.

(4) This dispute resolution process shall be used only for the purpose of determining the rights of the parties to retained funds and interest earned on retained funds and is not intended to alter, abrogate, or limit any rights with respect to remedies that are available to enforce or compel performance of the terms of the contract by either party.

(5) The agent may request and shall receive all pertinent information from the parties and shall provide an opportunity for an informal meeting to receive comments, documents, and other relevant information in order to resolve the dispute. The agent shall determine the time, place and procedure for the informal meeting. A written decision and reasons for the decision shall be given to the parties within 14 days after the meeting.

(6) The decision of the agent shall be final and binding upon all parties. Upon application of either party, the decision of the agent may be vacated by order of the circuit court only upon a finding by the court that the decision was procured by fraud, duress, or other illegal means.

(7) If the dispute resolution results in a decision.

(a) That there has been a delay as described in subsection (3)(a), all interest earned on retained funds during the period of delay shall become the property of the public agency.

(b) That there has been unacceptable delay as described in subsection (3)(b), the public agency may contract with a subsequent contractor to complete the remaining 6% of work under the contract, and interest earned on retained funds shall become the property of the public agency. A subsequent Contractor under this subdivision shall be paid by the public agency from the following sources until each source is depleted, in the order listed below:

(i) The dollar value of the original contract, less the dollar value of funds already paid to the original contractor and the dollar value of work for which the original contractor has not received payment.

(ii) Retainage from the original contractor, or funds made available under a letter of credit provided under section 3(5).

(iii) Interest earned on retainage from the original contractor, or funds made available under a letter of credit provided under section 3(5).

(8) If the public agency contracts with a subsequent contractor as provided in subsection (7)(b), the final progress payment shall be payable to the original contractor within the time period specified in section 2(3). The amount of the final progress payment to the original contractor shall not include interest earned on retained funds. The public agency may deduct from the final progress payment all expenses of contracting with the subsequent contractor. This act shall not impair the right of the public agency to bring an action or to otherwise enforce a performance bond to complete work under a construction contract.

Sec. 5

(1) Except as provided in subsection (2), this act shall apply only to a construction contract entered into after the effective date of this act.

(2) For a construction contract entered into before the effective date of this act, the provisions of this act may be implemented by a public agency, through a contract amendment, upon the written request of the contractor, with such consideration as the public agency considers adequate.

Sec. 6

This act shall take effect January 1, 1983. AGREEMENT

AGREEMENT

BETWEEN OWNER AND CONTRACTOR

ON THE BASIS OF A STIPULATED PRICE

THIS AGREEMENT is dated as of the _____day of _____ in the year 2016 by and between

SAGINAW COUNTY PUBLIC WORKS COMMISSIONER (hereinafter called OWNER) and

(hereinafter called CONTRACTOR).

OWNER and CONTRACTOR in consideration of the mutual covenants hereinafter set forth, agree as follows:

Blank Tile Drain

Article 1. WORK

CONTRACTOR shall complete all Work as specified or indicated in the Contract Documents. The Work is generally described as follows: Work - The entire completed construction of the various separately identifiable parts thereof required to be furnished under the Contract Documents. Work includes and is the result of performing or furnishing labor and furnishing and incorporating materials and equipment into the construction, and performing or furnishing services and furnishing documents, all as required by the Contract Documents.

The Project for which the Work under the Contract Documents is being done may be the whole or only a part is generally described as follows: Project - The total construction of which the Work to be provided under the Contract Documents may be the whole, or a part as indicated elsewhere in the Contract Documents.

Article 2. PROFESSIONAL

The Project has been designed by: **Spicer Group, Inc.**

who is hereinafter called PROFESSIONAL and who is to act as OWNER's representative, assume all duties and responsibilities and have the rights and authority assigned to PROFESSIONAL in the Contract Documents in connection with completion of the Work in accordance with the Contract Documents.

Article 3. CONTRACT TIME

3.1 The Work will be substantially completed and ready for final payment in accordance with paragraph 14.13 of the General Conditions per the times as indicated in the Bid Form, Section 5.

3.2 *Liquidated Damages*. OWNER and CONTRACTOR recognize that time is of the essence of this Agreement and that OWNER will suffer financial loss if the Work is not completed within the times specified in paragraph 3.1 above, plus any extensions thereof allowed in accordance with Article 12 of the General Conditions. They also recognize the delays, expense, and difficulties involved in proving the actual loss suffered by OWNER if the Work is not completed on time. Accordingly, instead of requiring any such proof, OWNER and CONTRACTOR agree that as liquidated damages for delay (but not as a penalty) CONTRACTOR shall pay OWNER **five hundred dollars ($500.00)** for each day that expires after the time specified in Section 3.1 for Substantial Completion until the Work is substantially complete. After Substantial Completion if CONTRACTOR shall neglect, refuse or fail to complete the remaining Work within the Contract Time specified in Section 3.1 or any proper extension thereof granted by OWNER, CONTRACTOR shall pay OWNER **five hundred dollars ($500.00)** for each day that expires after the time specified in Section 3.1 for completion and readiness for final payment.

3.3 All inspection on this project will be performed by the PROFESSIONAL. The CONTRACTOR shall state in the proposal the number of inspection days required for the completion of this project.

A required minimum number of Inspection has been shown in the proposal.

The Contractor is to bid the Additional Inspection if in his opinion the Inspection amount is not adequate, in which case the Contractor should write in the blank the total number additional inspection days he feels it will take to complete this project.

The total inspection day's fee bid will be part of the total contract price and will be considered to determine the low bidder on the project.

An inspection day shall be an **8-**hour day, Monday thru and including Friday and not a holiday day when an inspector or resident project representative is required to observe the following type of work.

1. Laying pipe and appurtenances.
2. Backfilling trenches.
3. Exploratory Excavation/Utility location.
4. Installing any manholes or catchbasins.
5. Setting of castings on manholes and catchbasins.

This is not intended to be an all inclusive list, but rather a mere sample.

The amount bid for inspection days shall not change through the course of the project unless by Change Order to the Contract for additional work and shall be prepared by the PROFESSIONAL.

Each progress payment shall include a section where the Contractor is paid the number of inspection days used up to the bid amount unless additional days have been added. The progress payment shall also have a section where the actual number of inspection days used shall be deducted from the Contractor's progress payment.

If the project is completed at the Inspection (Minimum Estimated by the Engineer) amount or under, the Inspection (Minimum Days Estimated by Engineer) amount shall be deducted from the Contract **and the remainder will be credited to the Contractor.**

If the project is completed at the Additional Inspection (Extra Days Estimated by Contractor) amount or under, the amount actually used, shall be deducted from the contract **and the remainder will be credited to the Contractor.**

The person doing the inspection and observation shall be known as the Resident Project Representative (RPR) whose limitations of authority and responsibilities are generally described in paragraph 9.13 of the General Conditions.

The CONTRACTOR shall be responsible for coordinating with the PROFESSIONAL the starting and stopping times of each workday. Any work performed by the CONTRACTOR without the Resident Project Representative will not be paid or shall be exposed, uncovered and witnessed that it was properly installed before recommendation for payment will be made.

Hours worked in excess of the **8** hour-day, a **40** hour work week; hours on Saturday, Sunday, or hours on a Holiday shall be charged at 1 ½ times **$96.00** per hour.

Show-up time for the Resident Project Representative will be charge at a minimum of two hours per day.

The inspector's daily report (IDR) shall reflect the exact hours to be charged to the Contractor for that particular day. The contractor shall receive copies of the weeks IDR the following Monday morning.

Article 4. CONTRACT PRICE

OWNER shall pay CONTRACTOR for completion of the Work in accordance with the Contract Documents an amount in current funds equal to the sum of the amounts determined pursuant to paragraph 4.1 below:

4.1 for all Unit Price Work, an amount equal to the sum of the established unit price for each separately identified item of Unit Price Work times the estimated quantity of that item as indicated in this paragraph 4.1:

SEE EXHIBIT "A"

Item No.	Estimated Quantity	Unit	Description	Unit Price	Amount

TOTAL CONTRACT AMOUNT ---------- $_____

As provided in paragraph 11.9 of the General Conditions estimated quantities are not guaranteed, and determinations of actual quantities and classifications are to be made by PROFESSIONAL as provided in paragraph 9.10 of the General Conditions. Unit prices have been computed as provided in paragraph 11.9 of the General Conditions.

Article 5. PAYMENT PROCEDURES

CONTRACTOR shall submit Applications for Payment in accordance with Article 14 of the General Conditions. Applications for Payment will be processed by PROFESSIONAL as provided in the General Conditions.

5.1 In accordance with Payment Schedule No. 2 of Act 524 of Public Acts of 1980, Payment requests shall be limited to three or fewer payments less ten percent (10%) retained on each payment request, except for the final payment, which shall include all amounts previously retained. Payment requests will only be permitted after completion of fifty percent (50%) of the project, after seventy-five percent (75%) of the project and after one hundred percent (100%) of the project is completed and accepted. No payment request will be made within 30 consecutive days of a previous request.

5.2 *Final Payment*. Upon final completion and acceptance of the Work in accordance with paragraph 14.13 of the General Conditions, OWNER shall pay the remainder of the Contract Price as recommended by PROFESSIONAL as provided in Section 14.13.

Article 6. INTEREST

All moneys not paid when due as provided in Article 14 of the General Conditions shall bear interest as allowed by law at the place of the Project.

Article 7. CONTRACTOR'S REPRESENTATIONS

In order to induce OWNER to enter into this Agreement CONTRACTOR makes the following representations:

7.1 CONTRACTOR has examined and carefully studied the Contract Documents (including the Addenda) and other related data identified in the Bidding Documents including "technical data".

7.2 CONTRACTOR has visited the site, conducted an alert, heads-up, eyes-open reasonable examination of the area, and become familiar with and is satisfied as to the general, local and site conditions that may affect cost, progress, performance or furnishing of the Work.

7.3 CONTRACTOR is familiar with and is satisfied as to all federal, state, and local Laws and Regulations that may affect cost, progress, performance, and furnishing of the Work.

7.4 CONTRACTOR has carefully studied all reports of explorations and tests of subsurface or physical conditions at or contiguous to the site and all drawings of physical conditions in or relating to existing surface or

subsurface structures at or contiguous to the site (except Underground Facilities) which have been identified, if any, in the General Conditions as provided in paragraph 4.2.1. CONTRACTOR accepts the determination set forth in paragraph 4.2.2 of the General Conditions of the extent of the "technical data" contained in such reports and drawings upon which CONTRACTOR is entitled to rely as provided in paragraph 4.2 of the General Conditions. CONTRACTOR acknowledges that such reports and drawings are not Contract Documents and may not be complete for CONTRACTOR's purposes. CONTRACTOR acknowledges that OWNER and Professional do not assume responsibility for the accuracy or completeness of information and data shown or indicated in the Bidding Documents with respect to Underground Facilities at or contiguous to the site. CONTRACTOR has obtained and carefully studied (or assumes responsibility for having done so) all such additional or supplementary examinations, investigations, explorations, tests, studies and data concerning conditions (surface, subsurface and Underground Facilities) at or contiguous to the site or otherwise which may affect cost progress, performance or furnishing of the Work or which relate to any aspect of the means, methods, techniques, sequences and procedures of construction to be employed by CONTRACTOR and safety precautions and programs incident thereto. CONTRACTOR does not consider that any additional examinations, investigations, explorations, tests, studies or data are necessary for the determination of this Bid for performance and furnishing of the Work in accordance with the times, price and other terms and conditions of the Contract Documents.

7.5 CONTRACTOR is aware of the general nature of work to be performed by OWNER and others at the site that relates to the Work as indicated in the Contract Documents.

7.6 CONTRACTOR has correlated the information known to the CONTRACTOR, information and observations obtained from visits to the site, reports and drawings identified in the Contract Documents and all additional examinations, investigations, explorations, tests, studies and data with the Contract Documents.

7.7 CONTRACTOR has given PROFESSIONAL written notice of all conflicts, errors, ambiguities or discrepancies that CONTRACTOR has discovered in the Contract Documents and the written resolution thereof by PROFESSIONAL is acceptable to CONTRACTOR, and the Contract Documents are generally sufficient to indicate and convey understanding of all terms and conditions for performance and furnishing of the Work.

Article 8. CONTRACT DOCUMENTS.

The Contract Documents, which comprise the entire agreement between OWNER and CONTRACTOR concerning the Work, consist of the following:

8.1 This Agreement.
8.2 Exhibits to this Agreement.
8.4 Notice to Proceed.
8.5 General Conditions.
8.6 Specifications contained herein.
8.7 Drawings as listed on this document's Title Page.
8.8 Addenda.
8.9 CONTRACTOR's Bid.
8.10 Documentation submitted by CONTRACTOR prior to Notice of Award.
8.11 The following which may be delivered or issued after the Effective Date of the Agreement and are not attached hereto: All Written Amendments and other documents amending, modifying or supplementing the Contract Documents pursuant to paragraphs 3.5 and 3.6 of the General Conditions.

The documents listed in paragraphs 8.2 et seq. above are deemed attached to this Agreement.

There are no Contract Documents other than those listed above in this Article 8. The Contract Documents may only be amended, modified or supplemented as provided in paragraphs 3.5 and 3.6 of the General Conditions.

Article 9. MISCELLANEOUS

9.1 Terms used in this Agreement, which are defined in Article 1 of the General Conditions, will have the meanings indicated in the General Conditions.

9.2 No assignment by a party hereto of any rights under or interests in the Contract Documents will be binding on another party hereto without the written consent of the party sought to be bound; and specifically but without limitation, moneys that may become due and moneys that are due may not be assigned without such consent (except to the extent that the effect of this restriction may be limited by law), and unless specifically stated to the contrary in any written consent to an assignment no assignment will release or discharge the assignor from any duty or responsibility under the Contract Documents.

9.3 OWNER and CONTRACTOR each binds itself, its partners, successors, assigns and legal representatives to the other party hereto, its partners, successors, assigns and legal representatives in respect of all covenants, agreements and obligations contained in the Contract Documents.

9.4 Any provision or part of the Contract Documents held to be void or unenforceable under any Law or Regulation shall be deemed stricken, and all remaining provisions shall continue to be valid and binding upon OWNER and CONTRACTOR, who agree that the Contract Documents shall be reformed to replace such stricken provision or part thereof with a valid and enforceable provision that comes as close as possible to expressing the intention of the stricken provision.

9.5 OTHER PROVISIONS.

None

IN WITNESS WHEREOF, OWNER and CONTRACTOR have signed this Agreement in triplicate. One counterpart each has been delivered to OWNER, CONTRACTOR and PROFESSIONAL. All portions of the Contract Documents have been signed, initialed or identified by OWNER and CONTRACTOR or identified by PROFESSIONAL on their behalf.

This Agreement will be effective on _____, 2016 (which is the Effective Date of the Agreement).

OWNER: Saginaw County Public Works Commissioner	CONTRACTOR:
By: _____	By: _____
Brian J. Wendling	
Attested by: _____	Attested by: _____
Address for giving notices:	Address for giving for notices:

Brian J. Wendling
Saginaw County Public Works Commissioner
111 South Michigan Avenue
Saginaw, MI 48602

NOTICE OF AWARD

Dated:

TO:

PROJECT: **Blank Tile Drain**

OWNER's CONTRACT NO.: **122848SG2015**

CONTRACT FOR: **Blank Tile Drain**
Saginaw County, Michigan

You are notified that your Bid dated **_____,** 2016 for the above Contract has been considered. You are the apparent Successful Bidder and have been awarded a contract for **Blank Tile Drain, Saginaw County, Michigan.**

The Contract Price of your contract is **_____($_____).**

Four (4) copies of each of the proposed Contract Documents (except Drawings) accompany this Notice of Award. Three (3) sets of the Drawings will be delivered separately or otherwise made available to you immediately.

You must comply with the following conditions precedent within fifteen (15) days of the date of this Notice of Award, that is by: _____.

1. You must deliver to Spicer Group, Inc. **three (3)** fully executed counterparts of the Agreement including the Construction Performance Bond, the Construction Payment Bond, and the Certificates of Insurance.

2. You must deliver with the executed Agreement the Contract Security (Bonds) as specified in the Instructions to Bidders (paragraph 18) and General Conditions (paragraph 5.1).

Failure to comply with these conditions within the time specified will entitle OWNER to consider your bid in default, to annul this Notice of Award and to declare your Bid Security forfeited.

Within ten days after you comply with the above conditions, OWNER will return to you one fully signed counterpart of the Agreement with the Contract Documents attached. Construction will commence upon issuance of Notice to Proceed, which is estimated to be in early September.

SPICER GROUP, INC. on behalf of

Brian J. Wendling
Saginaw County Public Works Commissioner

By: _____
Nicholas D. Czerwinski, P.E.
Project Manager

ACCEPTANCE OF AWARD

By: _____

Copy to PROFESSIONAL

Date _____

NOTICE TO PROCEED

Dated:

TO:

PROJECT: **BLANK TILE DRAIN**

OWNER's CONTRACT No.: **122848SG2015**

CONTRACT FOR: **BLANK TILE DRAIN**
SAGINAW COUNTY, MICHIGAN

You are notified that the contract Times under the above contract will commence to run on _____, 2016. By the date, you are to start performing your obligations under the contract Documents. In accordance with Article 3 of the Agreement the dates of Substantial completion and completion and readiness for final payment are December 16, 2016 and June 12, 2017.

Before you may start any Work at the site, the General conditions provides that you and Owner must each deliver to the other (with copies to PROFESSIONAL and other identified additional insureds) certificates of insurance which each is required to purchase and maintain in accordance with the contract Documents.

Also before you may start any Work at the site, you must:

_____

(add other requirements)

(OWNER)

By:_____
Brian J. Wendling
Saginaw County Public Works Commissioner

ACCEPTANCE OF AWARD

By:_____

Copy to PROFESSIONAL

_____
DATE

EJCDC No. 1910-23 (1990 Edition)
Prepared by the Engineers Joint Contract Documents committee and endorsed by the Associated General Contractors of America.

TABLE OF CONTENTS OF GENERAL CONDITIONS

Article or Paragraph Number & Title		*Page Number*
1.	**DEFINITIONS**	13
1.1	Addenda	13
1.2	Agreement	13
1.3	Application for Payment	13
1.4	Asbestos	13
1.5	Bid	13
1.6	Bidding Documents	13
1.7	Bidding Requirements	13
1.8	Bonds	13
1.9	Change Order	13
1.10	Contract Documents	13
1.11	Contract Price	13
1.12	Contract Times	13
1.13	CONTRACTOR	13
1.14	*Defective*	13
1.15	Drawings	13
1.16	Effective Date of the Agreement	14
1.17	Field Order	14
1.18	General Requirements	14
1.19	Hazardous Waste	14
1.20	Laws and Regulations; Laws or Regulations	14
1.21	Liens	14
1.22	Milestone	14
1.23	Notice of Award	14
1.24	Notice to Proceed	14
1.25	OWNER	14
1.26	Partial Utilization	14
1.27	PCB's	14
1.28	Petroleum	14
1.29	PROFESSIONAL	14
1.30	PROFESSIONAL's Consultant	14
1.31	Project	14
1.32	Radioactive Material	14
1.33	Resident Project Representative	14
1.34	Samples	14
1.35	Shop Drawings	14
1.36	Specifications	14
1.37	Subcontractor	15
1.38	Substantial Completion	15
1.39	Supplementary Conditions	15
1.40	Supplier	15
1.41	Underground Facilities	15
1.42	Unit Price Work	15
1.43	Work	15
1.44	Work Change Directive	15
1.45	Written Amendment	15
2.	**PRELIMINARY MATTERS**	15
2.1	Delivery of Bonds	15
2.2	Copies of Documents	15
2.3	Commencement of Contract Times; Notice to Proceed	15
2.4	Starting the Work	16
2.5-2.7	Before Starting Construction: CONTRACTOR's Responsibility to Report; Preliminary Schedules; Delivery of Certificates of Insurance	16
2.8	Preconstruction Conference	16
2.9	Initially Acceptable Schedules	16
3.	**CONTRACT DOCUMENTS: INTENT, AMENDING, REUSE**	16
3.1-3.2	Intent	16
3.3	Reference to Standards and Specifications of Technical Societies; Reporting and Resolving Discrepancies	17
3.4	Intent of Certain Terms or Adjectives	17
3.5	Amending Contract Documents	17
3.6	Supplementing Contract Documents	18
3.7	Reuse of Documents	18
4.	**AVAILABILITY OF LANDS; SUBSURFACE AND PHYSICAL CONDITIONS; REFERENCE POINTS**	18
4.1	Availability of Lands	18
4.2	Subsurface and Physical Conditions	18
4.2.1	Reports and Drawings	18
4.2.2	Limited Reliance by CONTRACTOR Authorized; Technical Data	19
4.2.3	Notice of Differing Subsurface or Physical Conditions	19
4.2.4	PROFESSIONAL's Review	19
4.2.5	Possible Contract Documents Change	19
4.2.6	Possible Price and Times Adjustments	19
4.3	Physical Conditions-Underground Facilities	20
4.3.1	Shown or Indicated	20
4.3.2	Not Shown or Indicated	20
4.4	Reference Points	20
4.5	Asbestos, PCB's Petroleum, Hazardous Waste or Radioactive Material	21
4.6	Responsibility for Moving of Structures	22
5.	**BONDS AND INSURANCE**	22
5.1-5.2	Performance, Payment and Other Bonds	22
5.3	Licensed Sureties and Insurers; Certificates of Insurance	22

Article or Paragraph Number & Title		*Page Number*
5.4	CONTRACTOR's Liability Insurance	22
5.5	OWNER's Liability Insurance	23
5.6	Property Insurance	23
5.7	Boiler and Machinery or Additional Property Insurance	24
5.8	Notice of Cancellation Provisions	24
5.9	CONTRACTOR's Responsibility for Deductible Amounts	24
5.10	Other Special Insurance	24
5.11	Waiver of Rights	24
5.12-5.13	Receipt and Application of Insurance Proceeds	25
5.14	Acceptance of Bonds and Insurance; Option to Replace	25
5.15	Partial Utilization—Property Insurance	25
6.	**CONTRACTOR'S RESPONSIBILITIES**	26
6.1-6.2	Supervision and Superintendence	26
6.3-6.5	Labor, Materials and Equipment	26
6.6	Progress Schedule	26
6.7	Substitutes and "Or-Equal" Items; CONTRACTOR's Expense; Substitute Construction Methods or Procedures; PROFESSIONAL's Evaluation	26
6.8-6.11	Concerning Subcontractors, Suppliers and Others; Waiver of Rights	28
6.12	Patent Fees and Royalties	28
6.13	Permits	28
6.14	Laws and Regulations	29
6.15	Taxes	29
6.16	Use of Premises	29
6.17	Site Cleanliness	29
6.18	Safe Structural Loading	29
6.19	Record Documents	29
6.20	Safety and Protection	29
6.21	Safety Representative	30
6.22	Hazard Communication Programs	30
6.23	Emergencies	30
6.24	Shop Drawings and Samples	30
6.25	Submittal Procedures; CONTRACTOR's Review Prior to Shop Drawing or Sample Submittal	31
6.26	Shop Drawing & Sample Submittals Review by PROFESSIONAL	31
6.27	Responsibility for Variation From Contract Documents	31
6.28	Related Work Performed Prior to PROFESSIONAL's Review and Approval of Required Submittals	31
6.29	Continuing the Work	32
6.30	CONTRACTOR's General Warranty and Guarantee	32
6.31-6.33	Indemnification	32
6.34	Survival of Obligations	33
7.	**OTHER WORK**	33
7.1-7.3	Related Work at Site	33
7.4	Coordination	33
8.	**OWNER'S RESPONSIBILITIES**	33
8.1	Communications to Contractor	33
8.2	Replacement of PROFESSIONAL	33
8.3	Furnish Data and Pay Promptly When Due	33
8.4	Lands and Easements; Reports and Tests	34
8.5	Insurance	34
8.6	Change Orders	34
8.7	Inspections, Tests and Approvals	34
8.8	Stop or Suspend Work; Terminate CONTRACTOR's Services	34
8.9	Limitations on OWNER's Responsibilities	34
8.10	Asbestos, PCB's Petroleum, Hazardous Waste or Radioactive Material	34
8.11	Evidence of Financial Arrangements	34
9.	**PROFESSIONAL'S STATUS DURING CONSTRUCTION**	34
9.1	OWNER's Representative	34
9.2	Visits to Site	34
9.3	Project Representative	34
9.4	Clarifications and Interpretations	35
9.5	Authorized Variations in Work	35
9.6	Rejecting Defective Work	35
9.7-9.9	Shop Drawings, Change Orders and Payments	35
9.10	Determinations for Unit Prices	35
9.11-9.12	Decisions on Disputes; PROFESSIONAL as Initial Interpreter	35
9.13	limitations on PROFESSIONAL as Authority and Responsibilities	36
10.	**CHANGES IN THE WORK**	37
10.1	OWNER Ordered Change	37
10.2	Claim for Adjustment	37
10.3	Work Not Required by Contract Documents	37
10.4	Change Orders	37
10.5	Notification of Surety	37
11.	**CHANGE OF CONTRACT PRICE**	37
11.1-11.3	Contract Price; Claim for Adjustment; Value of the Work	37

Article or Paragraph Number & Title		*Page Number*
11.4	Cost of the Work	38
11.5	Exclusions to Cost of the Work	39
11.6	CONTRACTOR's Fee	39
11.7	Cost Records	40
11.8	Cash Allowances	40
11.9	Unit Price Work	40
12.	**CHANGE OF CONTRACT TIMES**	40
12.1	Claim for Adjustment	40
12.2	Time of the Essence	41
12.3	Delays Beyond CONTRACTOR's Control	41
12.4	Delays Beyond OWNER's and CONTRACTOR's Control	41
13.	**TESTS AND INSPECTIONS; CORRECTION, REMOVAL OR ACCEPTANCE OR DEFECTIVE WORK**	41
13.1	Notice of Defects	41
13.2	Access to the Work	41
13.3	Tests and Inspections; Contractor's Cooperation	41
13.4	OWNER's Responsibilities; Independent Testing Laboratory	41
13.5	CONTRACTOR's Responsibilities	41
13.6-13.7	Covering Work Prior to Inspection, Testing or Approval	42
13.8-13.9	Uncovering Work at PROFESSIONAL's Request	42
13.10	OWNER May Stop the Work	42
13.11	Correction or Removal of Defective Work	42
13.12	Correction Period	42
13.13	Acceptance of Defective Work	43
13.14	OWNER May Correct Defective Work	43
14.	**PAYMENTS TO CONTRACTOR AND COMPLETION**	43
14.1	Schedule of Values	43
14.2	Application for Progress Payment	43
14.3	CONTRACTOR's Warranty of Title	44
14.4-14.7	Review of Applications for Progress Payments	44
14.8-14.9	Substantial Completion	45
14.10	Partial Utilization	45
14.11	Final Inspection	46
14.12	Final Application for Payment	46
14.13-14.14	Final Payment and Acceptance	46
14.15	Waiver of Claims	47
15.	**SUSPENSION OF WORK AND TERMINATION**	47
15.1	OWNER May Suspend Work	47
15.2-15.4	OWNER May Terminate	47
15.5	CONTRACTOR May Stop Work or Terminate	48
16.	**DISPUTE RESOLUTION**	48
17.	**MISCELLANEOUS**	50
17.1	Giving Notice	50
17.2	Computation of Times	50
17.3	Notice of Claim	50
17.4	Cumulative Remedies	51
17.5	Professional Fees and Court Costs Included	51

INDEX TO GENERAL CONDITION

	Article or Paragraph Number
Acceptance of—	
Bonds and Insurance	5.14
defective Work	10.4.1, 13.13, 13.14
final payment	9.12, 14.15
insurance	5.14
other Work by CONTRACTOR	7.3
Substitutes and "Or-Equal" Items	6.7.1
Work by OWNER	2.5, 6.30, 6.34
Access to them-	
Lands, OWNER and CONTRACTOR responsibilities	4.1
site, related work	7.2
Work	13.2, 13.14, 14.9
Acts or Omissions—Acts and Omissions—	
CONTRACTOR	6.9.1, 9.13.3
PROFESSIONAL	6.20, 9.13.3
OWNER	6.20, 8.9
Addenda—definition of (also see definition of Specifications	(1.6, 1.10, 6.19) 1.1
Adjustments	
Contract Price or Contract Times	1.5, 3.5, 4.1, 4.3.2, 4.5.2, 4.5.3, 9.4, 9.5, 10.2-10.4, 11, 12, 14.8, 15.1
progress schedule	6.6
Agreement—	
definition of	1.2
All risk Insurance, policy form	6.6.2
Allowances, Cash	11.8
Alternate Dispute Resolution Agreement	16.1
Amending Contract Documents	3.5
Amendment, Written—	
in general	1.10, 1.45, 3.5, 5.10, 5.12, 6.6.2, 6.8.2, 6.19, 10.1, 10.4, 11.2, 12.1 13.12.2, 14.7
Appeal, OWNER or CONTRACTOR intent to	9.10, 9.11, 10.4, 16.2, 16.5
Application for Payment—	
definition of	1.3
PROFESSIONAL's Responsibility	9.9
final payment	9.13.4, 9.13.5, 14.12-14.15
in general	2.8, 2.9, 5.6.4, 9.10, 15.5
progress payment	14.1, 14.7
review of	14.4-14.7
Arbitration (Optional)	16.1-16.3
Asbestos—	
claims pursuant thereto	4.5.2, 4.5.3
CONTRACTOR authorized to stop Work	4.5.2
definition of	1.4
OWNER responsibility for	4.5.1, 8.10
possible price and times change	4.5.2
Authorized Variations in Work	3.6, 6.25, 6.27, 9.5
Availability of Lands	4.1, 8.4
Award, Notice of—defined	1.25
Before Starting Construction	2.5-2.8
Bid—definition of	1.5 (1.1, 1.10, 2.3, 3.3. 4.2.6.4, 6.13, 11.4.3, 11.9.1)
Bidding Documents—definition of	1.6 (6.8.2)
Bidding Requirements—definitions of	(1.1, 4.2.6.2)
Bonds—	
acceptance of	5.14
additional bonds	10.5, 11.4.5.9
Cost of the Work	11.5.4
definition of	1.8
delivery of	2.1, 5.1
final application for payment	14.12-14.14
general	1.10, 5.1-5.3, 5.13, 9.13,10.5, 14.7.6
performance, Payment and Other	5.1-5.2
Bonds and Insurance—in general	5
Builder's risk "all risk" policy form	5.6.2
Cancellation Provisions, Insurance v	5.4.11, 5.8, 5.15
Cash Allowances	11.8
Certificate of Substantial Completion 1	.38, 6.30.2.3, 14.8, 14.10
Certificates of Inspection	9.13.4, 13.5, 14.12
Certificates of Insurance	5.3, 5.4.11, 5.4.13, 5.14, 9.13.4, 14.12
Change in Contract Price—	
Cash Allowances	11.8
claim for price adjustment	4.1, 4.2.6, 4.5, 5.15, 6.8.2 ,9.4, 9.5, 9.11, 10.2, 10.5, 11.2, 13.9, 13.13, 13.14, 15.1, 15.5
CONTRACTOR's fee	11.6
Cost of the Work general	11.4-11.7
Exclusions to	11.5
Cost Records	11.7
in general	1.19, 1.44, 9.11, 10.4.2, 10.4.3, 11
Lump Sum Pricing	11.3.2
Notification of Surety	10.5
Scope of	10.3-10.4
Testing and Inspection, Uncovering the Work	13.9
Unit Price Work	11.3
Change in Contract Times—	
Claim for times adjustment	4.1, 4.2.6, 4.5, 5.15, 6.8.2, 9.4, 9.5, 9.11, 10.2, 10.5, 12.1, 13.9, 13.13, 13.14, 14.7, 15.1, 15.5
Contractual time limits	12.2
Delays beyond CONTRACTOR's control	12.3
Delays beyond OWNER's and CONTRACTOR'S control	12.4
Notification of surety	10.5
Scope of change	10.3-10.4
Change Orders—	
Acceptance of Defective Work	13.13
Amending Contract Documents	3.5
Cash Allowances	11.8
Change of Contract Price	11
Change of Contract Times	12
Change in the Work	10
CONTRACTOR's fee	11.6
Cost of the Work	11.4-11.7
Cost Records	11.7
definition of	1.9
emergencies	6.23
PROFESSIONAL's responsibility	9.8, 10.4, 11.2, 12.1
execution of	10.4
Indemnification	6.12, 6.16, 6.31, 6.33
Insurance, Bonds and	5.10, 5.13, 10.5
OWNER may terminate	15.2-15.4

	Article or Paragraph Number
OWNER's Responsibility	8.6, 10.4
Physical Conditions—	
Subsurface and,	4.2
Underground Facilities	4.3.2
Record Documents	6.19
Scope of Change	10.3-10.4
Substitutes	6.7.3, 6.8.2
Unit Price Work	11.9
value of Work, covered by	11.3
Changes in the Work	10
Notification of surety	10.5
OWNER's and CONTRACTOR's responsibilities	10.4
Right to an adjustment	10.2
Scope of change	10.3-10.4
Claims-	
against CONTRACTOR	6.16
against PROFESSIONAL	6.32
against OWNER	6.32
Change of Contract Price	9.4, 11.2
Change of Contract Times	9.4, 12.1
CONTRACTOR's	4.7.1, 9.4, 9.5, 9.11, 10.2, 11.2, 11.9, 12.1, 14.8, 15.1, 15.5, 17.3
CONTRACTOR's Fee	11.6
CONTRACTOR's liability	5.4, 6.12, 6.16, 6.31
Cost of the Work11.	4, 11.5
Decisions on Disputes	9.11, 9.12
Dispute Resolution	16.1
Dispute Resolution Agreement	16.1-16.3
PROFESSIONAL as initial interpreter	9.11
Lump Sum Pricing	11.3.2
Notice of	17.3
OWNER's	9.4, 9.5, 9.11, 10.2, 11.2, 11.9, 12.1 13.9, 13.13, 13.14, 17.3
OWNER's liability	5.5
OWNER may refuse to make prompt payment	14.7
Professional Fees and Court Costs Included	17.5
request for formal decision on	9.11
Substitute items	6.7.1.2
Time Extension	12.1
Time requirements	9.11, 12.1
Unit Price Work	11.9
Value of	11.3
Waiver of-on Final Payment	14.14, 14.15
Work Change Directive	10.2
written notice required	9.11, 11.2, 12.1
Clarifications and Interpretations	3.6.3, 9.4, 9.11
Clean Site	6.17
Codes of Technical Society, Organization or Association	3.3.3
Commencement of Contract Times	2.3
Communications-	
general	6.2, 6.9.2, 8.1
Hazard Communication Programs	6.22
Completion—	
Final Application for Payment	14.12
Final Inspection	14.11
Final Payment and Acceptance	14.13-14.14
Partial Utilization	14.10
Substantial Completion	1.38, 14.8-14.9

	Article or Paragraph Number
Waiver of Claims	14.15
Computation of Times	17.2, 17.2.1
Concerning Subcontractors, Suppliers and Others	6.8-6.11
Conferences—	
initially acceptable schedules	2.9
preconstruction	2.8
Conflict, Error, Ambiguity, Discrepancy-CONTRACTOR to Report	2.5, 3.3.2
Construction, before starting by CONTRACTOR	2.5-2.6
Construction Machinery, Equipment, etc.	6.4
Continuing the Work	6.29, 10.4
Contract Documents—	
Amending	3.5
Bonds	5.1
Cash Allowances	11.8
Change or Contract Price	11
Change of Contract Times	12
Changes in the Work	10.4-10.5
check and verify	2.5
Clarifications and Interpretations	3.2, 3.6, 9.4, 9.11
definition of	1.10
PROFESSIONAL as initial interpreter of	9.11
PROFESSIONAL as OWNER's representative	9.1
general	3
Insurance	5.3
Intent	3.1-3.4
minor variations in the Work	3.6
OWNER's responsibility to furnish data	8.3
OWNER's responsibility to make prompt payment	8.3, 14.4, 14.13
precedence	3.1, 3.3.3
Record Documents	6.19
Reference to Standards and Specifications of Technical Societies	3.3
Related Work	7.2
Reporting and Resolving Discrepancies	2.5, 3.3
Reuse of	3.7
Supplementing	3.6
Termination of PROFESSIONAL's Employment	8.2
Unit Price Work	11.9
variations	3.6,6.23, 6.27
Visits to Site, PROFESSIONAL's	9.2
Contract Price—	
adjustment of	3.5, 4.1, 9.4, 10.3, 11.2-11.3
Change of	11
Decision on Disputes	9.11
definition of	1.11
Contract Times—	
adjustment of	3.5, 4.1, 9.4, 10.3, 12
Change of	12.1-12.4
Commencement of	2.3
definition of	1.12
CONTRACTOR—	
Acceptance of Insurance	5.14
Limited Reliance on Technical Data Authorized	4.2.2
Communications	6.2, 6.8.2
Continue Work	6.29, 10.4
coordination and scheduling	6.8.2
definition of	1.13

	Article or Paragraph Number
May Stop Work or Terminate	15.5
provide site access to others	7.2, 13.2
Safety and Protection	4.3.1.2, 6.16, 6.18, 6.21-6.23, 7.2, 13.2
Shop Drawing and Sample Review Prior to Submittal	6.25
Stop Work requirements	4.5.2
CONTRACTOR's—	
Compensation	11.1-11.2
Continuing Obligation	14.15
Defective Work	9.6, 13.10-13.14
Duty to correct defective Work	13.11
Duty to Report—	
Changes in the Work caused by Emergency	6.23
Defects in Work of Others	7.3
Differing conditions	4.2.3
Discrepancy in Documents	2.5, 3.3.2, 6.14.2
Underground Facilities not indicated	4.3.2
Emergencies	6.23
Equipment and Machinery Rental, Cost of the Work	11.4.5.3
Fee—Cost Plus	11.4.5.6, 11.5.1, 11.6
General Warranty and Guarantee	6.30
Hazard Communication Programs	6.22
Indemnification	6.12, 6.16, 6.31-6.33
Inspection of the Work	7.3, 13.4
Labor, Materials and Equipment	6.3-6.5
Laws and Regulations, Compliance by	6.14.1
Liability Insurance	5.4
Notice of Intent to Appeal	9.10, 10.4
obligation to perform and complete the Work	6.30
Patent Fees and Royalties, paid for by	6.12
Performance and Other Bonds	5.1
Permits, obtained and paid for by	6.13
Progress Schedule	2.6, 2.8, 2.9, 6.6, 6.29, 10.4, 15.2.1
Request for formal decision on disputes	9.11
Responsibilities—	
Changes in the Work	10.1
Concerning Subcontractors, Suppliers and Others	6.8-6.11
Continuing the Work	6.29, 10.4
CONTRACTOR's expense	6.7.1.3
CONTRACTOR's General Warranty and Guarantee	6.30
CONTRACTOR's review prior to Shop Drawing or Sample submittal	6.25
Coordination of Work	6.8.2
Emergencies	6.23
PROFESSIONAL's evaluation, Substitutes or "Or-Equal" Items	6.7.3
For Acts and Omissions of Others	6.8.1-6.8.2, 9.13
for deductible amounts, insurance	5.9
general	6, 7.2, 7.3, 8.9
Hazardous Communication Programs	6.22
Indemnification	6.31-6.33
Labor, Materials and Equipment	6.3-6.5
Laws and Regulations	6.14
Liability Insurance	5.4

	Article or Paragraph Number
Notice of variation from Contract Documents	6.27
Patent Fees and Royalties	6.12
Permits	6.13
Progress Schedule	6.6
Record Documents	6.19
related Work performed prior to PROFESSIONAL's approval of required submittals	6.28
safe structural loading	6.18
Safety and Protection	6.20, 7.2, 13.2
Safety Representative	6.21
Scheduling the Work	6.8.2
Shop Drawings and Samples	6.24
Shop Drawings and Samples Review by PROFESSIONAL	6.24.2
Site Cleanliness	6.17
Submittal Procedures	6.25
Substitute Construction Methods and Procedures	6.7.2
Substitutes and "Or-Equal" Items	6.7.1
Superintendence	6.2
Supervision	6.1
Survival of Obligations	6.34
Taxes	6.15
Tests and Inspections	13.5
To Report	2.5
Use of Premises	6.16-6.18, 6.30.2.4
Review Prior to Shop Drawing or Sample Submittal	6.25
Right to adjustment for changes in the Work	10.2
right to claim	4, 7.1, 9.4, 9.5, 9.11, 10.2, 11.2 1.9, 12.1, 13.9, 14.8, 15.1, 15.5, 17.3
Safety and Protection	6.20-6.22, 7.2, 13.2
Safety Representative	6.21
Shop Drawings and Samples Submittals	6.24-6.28
Special Consultants	11.4.4
Substitute Construction Methods and Procedures	6.7.2
Substitutes and "Or-Equal" Items, Expense	6.7.1, 6.7.2
Subcontractors, Suppliers and Others	6.8-6.11
Supervision and Superintendence	6.1, 6.2, 6.21
Taxes, Payment by	6.15
Use of Premises	6.16-6.18
Warranties and guarantees	6.30, 6.5
Warranty of Title	14.3
Written Notice Required—	
CONTRACTOR stop Work or terminate	15.5
Reports of Differing Subsurface and Physical Conditions	4.2.3
Substantial Completion	14.8
CONTRACTORS—other	7
Contractual Liability Insurance	5.4.10
Contractual Time Limits	12.2
Coordination—	
CONTRACTOR's responsibility	6.8.2
Copies of Documents	2.2
Correction Period	13.12
Correction, Removal or Acceptance of Defective Work	
in general	10.4.1, 13.10-13.14
Acceptance of Defective Work	13.13

	Article or Paragraph Number
Correction or Removal of Defective Work	6.30, 13.11
Correction Period	13.12
OWNER May Correct Defective Work	13.14
OWNER May Stop Work	13.10
Cost—	
of Tests and Inspections	13.4
Records	11.7
Cost of the Work—	
Bonds and insurance, additional	11.4.5.9
Cash Discounts	11.4.2
CONTRACTOR's Fee	11.6
Employee Expenses	11.4.5.1
Exclusions to	11.5
General	11.4-11.5
Home office and overhead expenses	11.5
Losses and damages	11.4.5.6
Materials and equipment	11.4.2
Minor expenses	11.4.5.8
Payroll costs on changes	11.4.1
performed by Subcontractors	11.4.3
Records	11.7
Rentals of construction equipment and machinery	11.4.5.3
Royalty payments, permits and license fees	11.4.5.5
Site office and temporary facilities	11.4.5.2
Special Consultants, CONTRACTOR's	11.4.4
Supplemental	11.4.5
Taxes related to the Work	11.4.5.4
Tests and Inspection	13.4
Trade Discounts	11.4.2
Utilities, fuel and sanitary facilities	11.4.5.7
Work after regular hours	11.4.1
Covering Work	13.6-13.7
Cumulative Remedies	17.4-17.5
Cutting, fitting and patching	7.2
Data, to be furnished by OWNER	8.3
Day—definition of	17.2.1
Decisions on Disputes	9.11, 9.12
defective—definition of	1.14
defective Work—	
Acceptance of	10.4.1, 13.13
Correction or Removal of	10.4.1, 13.11
Correction Period	13.12
in general	13, 14.7, 14.11
Observation by PROFESSIONAL	9.2
OWNER May Stop Work	13.10
Prompt Notice of Defects	13.1
Rejecting	9.6
Uncovering the Work	13.8
Definitions	1
Delays	4.1, 6.29, 12.3-12.4
Delivery of Bonds	2.1
Determinations for Unit Prices	9.10
Differing Subsurface or Physical Conditions	
Notice of	4.2.3
PROFESSIONAL's Review	4.2.4
Possible Contract Documents Change	4.2.5
Discrepancies—	
Reporting and Resolving	2.5, 3.3.2, 6.14.2

	Article or Paragraph Number
Dispute Resolution—	
Agreement	16.1-16.3
Arbitration	16.1-16.3
general	16
Mediation	16.6
Dispute Resolution Agreement	16.1-16.3
Dispute, Decisions by PROFESSIONAL	9.11-9.12
Documents—	
Copies of	2.2
Record	6.19
Reuse of	3.7
Drawings-definition of	1.15
Easements	4.1
Effective date of Agreement—definition of	1.16
Emergencies	6.23
Equipment, Labor, Materials and	6.3-6.5
Equipment rental, Cost of the Work	11.4.5.3
Equivalent Materials and Equipment	6.7
Errors or omissions	6.33
Evidence of Financial Arrangements	8.11
Explorations of physical conditions	4.2.1
Fee, CONTRACTOR's—Costs-Plus	11.6
Field Order—	
definition of	1.19
issued by PROFESSIONAL	3.6.1, 9.5
Final Application for Payment	14.12
Final Inspection	14.11
Final Payment—	
and Acceptance	14.13-14.14
Prior to, for cash allowances	11.8
General Provisions	17.3-17.4
General Requirement-	
definition of	1.20
principal references to	2.6, 6.4, 6.6-6.7, 6.24
Giving Notice	17.1
Guarantee of Work—by CONTRACTOR	6.30, 14.12
Hazard Communication Programs	6.22
Hazardous Waste—	
definition of	1.21
general	4.5
OWNER's responsibility for	8.10
Indemnification	6.12, 6.16, 6.31-6.33
Initially Acceptable Schedules	2.9
Inspection—	
Certificates of	9.13.4, 13.5, 14.12
Final 14.11	
Special, required by PROFESSIONAL	9.6
Tests and Approval	8.7, 13.3-13.4
Insurance—	
Acceptance of, by OWNER	5.14
Additional, required by changes in the Work	11.4.5.9
Bonds and—in general	5
Cancellation Provisions	5.8
Certificates of	5, 5.3, 5.4.11, 5.4.13 5.8, 5.14, 9.13.4, 14.12
completed operations	5.4.13
CONTRACTOR's Liability	5.4
CONTRACTOR's objection to coverage	5.14
Contractual Liability	5.4.10

	Article or Paragraph Number
deductible amounts, CONTRACTOR's responsibility	5.9
Final Application for Payment	14.12
Licensed Insurers	5.3
Notice requirements, material changes	5.8, 10.5
Option to Replace	5.14
other special insurances	5.10
OWNER as fiduciary for insureds	5.12-5.13
OWNER's Liability	5.5
OWNER'S Responsibility	8.5
Partial Utilization, Property Insurance	5.15
Property	5.6-5.10
Receipt and Application of Insurance Proceeds	5.12-5.13
Special Insurance	5.10
Waiver of Rights	5.11
Intent of Contract Documents	3.1-3.4
Interpretations and Clarifications	3.6.3, 9.4
Investigations of physical conditions	4.2
Labor, Materials and Equipment	6.3-6.5
Land Monuments and Property Stakes, Protection of	4.1
Lands—	
and Easements	8.4
Availability of	4.1, 8.4
Reports & Tests	8.4
Laws and Regulations-Laws or Regulations—	
Bonds	5.1-5.2
Changes in the Work	10.4
Contract Documents	3.1
CONTRACTOR's Responsibilities	6.14
Correction Period, defective Work	13.12
Cost of the Work, taxes	11.4.5.4
definition of	1.22
general	6.14
Indemnification	6.31-6.33
Insurance	5.3
Precedence	3.1, 3.3.3
Reference to	3.3.1
Safety and Protection	6.20, 13.2
Subcontractors, Suppliers and Others	6.8-6.11
Tests and Inspections	13.5
Use of Premises	6.16
Visits to Site	9.2
Liability Insurance—	
CONTRACTOR's	5.4
OWNER's	5.5
Licensed Sureties and Insurers	5.3
Liens—	
Application for Progress Payment	14.2
Contractor's Warranty of Title	14.3
Final Application for Payment	14.12
definition of	1.23
Waiver of Claims	14.15
Limitations on PROFESSIONAL's authority and responsibilities	9.13
Limited Reliance by CONTRACTOR Authorized	4.2.2
Maintenance and Operating Manuals—	
Final Application for Payment	14.12
Manuals (of others)—	
Precedence	3.3.3.1
Reference to in Contract Documents	3.3.1
Materials and equipment—	
furnished by CONTRACTOR	6.3
not incorporated in Work	14.2
Materials or equipment—equivalent	6.7
Mediation (Optional)	16.7
Milestones—definition of	1.24
Miscellaneous—	
Computation of Times	17.2
Cumulative Remedies	17.4
Giving Notice	17.1
Notice of Claim	17.3
Professional Fees and Court Costs Included	17.5
Moving of Structures, Responsibility for	4.6
Multi-prime contracts	7
Not Shown or Indicated	4.3.2
Notice of—	
Acceptability of Project	14.13
Award, definition of	1.25
Claim	17.3
Defects,	13.1
Differing Subsurface or Physical Conditions	4.2.3
Giving	17.1
Tests and Inspections	13.3
Variation, Shop Drawing and Sample	6.27
Notice to Proceed—	
definition of	1.26
giving of	2.3
Notification to Surety	10.5
Observations, by PROFESSIONAL	6.30, 9.2
Occupancy of the Work	5.15, 6.30, 2.4, 14.10
Omissions or acts by CONTRACTOR	6.8.1, 9.13
Option to Replace	5.14
"Or Equal" Items	6.7
Other work	7
Overtime Work—prohibition of	6.3
OWNER—	
Acceptance of defective Work	13.13
appoint a PROFESSIONAL	8.2
as fiduciary	5.12-5.13
Availability of Lands responsibility	4.1
definition of	1.27
data, furnish	8.3
May Correct Defective Work	13.14
May refuse to make payment	14.7
May Stop the Work	13.10
may suspend work, terminate	8.8, 13.10, 15.1-15.4
Payment, make prompt	8.3, 14.4, 14.13
performance of other Work	7.1
permits and licenses, requirements	6.13
purchased insurance requirements	5.8-5.10
OWNER's—	
Acceptance of the Work	6.30.2.5
Change Orders, obligation to execute	8.6, 10.4
Communications	8.1
Coordination of the Work	7.4
Disputes, request for decision	9.11
Inspections, tests and approvals	8.7, 13.4
Liability Insurance	5.5
Notice of Defects	13.1

	Article or Paragraph Number
Representative—During Construction,	
PROFESSIONAL's Status	9.1
Responsibilities—	
Asbestos, PCB's, Petroleum, Hazardous Waste on Radioactive Material	8.10
Change Orders	8.6
Changes in the Work	10.1
communications	8.1
CONTRACTOR's responsibilities	8.9
evidence of financial arrangements	8.11
inspections, tests and approvals	8.7
Insurance	8.5
lands and easements	8.4
prompt payment by	8.3
replacement of PROFESSIONAL	8.2
reports and test	8.4
stop or suspend Work	8.8, 13.10, 15.1
terminate CONTRACTOR's services	8.8, 15.2
separate representative at site	9.3
independent testing	13.4
use or occupancy of the Work	5.15, 14.10
written consent or approval required	9.1, 6.3, 11.4
written notice required	7.1, 9.4, 9.11, 11.2, 11.9, 14.7, 15.4
PCB's—	
definition of	1.29
general	4.5
OWNER's responsibility for	8.10
Partial Utilization—	
definition of	1.28
general	6.30, 2.4, 14.10
Property Insurance	5.15
Patent Fees and Royalties	6.12
Payment Bonds	5.1-5.2
Payments, Recommendation of	14.4-14.7, 14.13
Payments to CONTRACTOR and Completion—	
Application for Progress Payments	14.2
CONTRACTOR's Warranty of Title	14.3
Final Application for Payment	14.12
Final Inspection	14.11
Final Payment and Acceptance	14.13-14.14
general	8.3, 14
Partial Utilization	14.10
Retainage	14.2
Review of Applications for Progress Payments	14.4-14.7
prompt payment	8.3
Schedule of Values	14.1
Substantial Completion	14.8-14.9
Waiver of Claims	14.15
when payments due	14.4, 14.13
withholding payment	14.7
Performance Bonds	5.1-5.2
Permits	6.13
Petroleum—	
definition of	1.30
general	4.5
OWNER's responsibility for	8.10
Physical Conditions—	
Drawings of, in or relating to	4.2.1.2

	Article or Paragraph Number
PROFESSIONAL's review	4.2.4
existing structures	4.2.2
general	4.2.1.2
Subsurface and,	4.2
Underground Facilities	4.3
Possible Contract Documents Change	4.2.5
Possible Price and Times Adjustments	4.2.6
Reports and Drawings	4.2.1
Notice of Differing Subsurface or,	4.2.3
Subsurface and	4.2
Subsurface Conditions	4.2.1.1
Technical Data, Limited Reliance by CONTRACTOR Authorized	4.2.2
Underground Facilities—	
general	4.3
Not Shown or Indicated	4.3.2
Protection of	4.3, 6.20
Shown or Indicated	4.3.1
Technical Data	4.2.2
Preconstruction Conference	2.8
Preliminary Matters	2
Preliminary Schedules	2.6
Premises, Use of	6.16-6.18
Price, Change of Contract	11
Price, Contract—definition of	1.11
PROFESSIONAL—	
as initial interpreter on disputes	9.11-9.12
definition of	1.17
Limitations on authority and responsibilities	9.13
Replacement of	8.2
Resident Project Representative	9.3
PROFESSIONAL's Consultant—definition of	1.18
PROFESSIONAL's—	
authority and responsibility, limitations on	9.13
Authorized Variations in the Work	9.5
Change Orders, responsibility for	9.7, 10, 11, 12
Clarifications and Interpretations	3.6.3, 9.4
Decisions on Disputes	9.11-9.12
defective Work, notice of	13.1
Evaluation of Substitute Items	6.7.3
Liability	6.32, 9.12
Notice of Work is Acceptable	14.13
Observations	6.30.2, 9.2
OWNER's Representative	9.1
Payments to the CONTRACTOR, Responsibility for	9.9, 14
Recommendation of Payment	14.4, 14.13
Responsibilities—	
Limitations on	9.11-9.13
Review of Reports on Differing Subsurface and Physical Conditions	4.2.4
Shop Drawings and Samples, review responsibility	6.26
Status During Construction—	
authorized variations in the Work	9.5
Clarifications and Interpretations	9.4
Decisions on Disputes	9.11-9.12
Determinations on Unit Price	9.10
PROFESSIONAL as Initial Interpreter	9.11-9.12
PROFESSIONAL's Responsibilities	9.1-9.12

	Article or Paragraph Number
Limitations on PROFESSIONAL's Authority and Responsibilities	9.13
OWNER's Representative	9.1
Project Representative	9.3
Rejecting Defective Work	9.6
Shop Drawings, Change Order and Payments	9.7-9.9
Unit Price Determinations	9.10
Visits to Site	9.2
Written consent required	7.2, 9.1
Progress Payment, Applications for	14.2
Progress payment—retainage	14.2
Progress schedule, CONTRACTOR'S	2.6, 2.8, 2.9, 6.6, 6.29, 10.4, 15.2.1
Project—definition of	1.31
Project Representative—-	
PROFESSIONAL's Status During Construction	9.3
Project Representative, Resident—definition of	1.33
prompt payment by OWNER	8.3
Property Insurance	5.8-5.10
Partial Utilization	5.15, 14.10.2
receipt and application of proceeds	5.12-5.13
Protection of Land Monuments and Property Stakes	4.1
Protection, Safety and	6.20-6.21, 13.2
Punch list	14.11
Radioactive Material—	
definition	1.32
general	4.5
OWNER's responsibility for	8.10
Recommendation of Payment	14.4, 14.5, 14.13
Record Documents	6.19, 14.12
Records, procedures for maintaining	2.8
Reference Points	4.4
Reference to Standards and Specifications of Technical Societies	3.3
Regulations, Laws and (or)	6.14
Rejecting Defective Work	9.6
Related Work—	
at Site	7.1-7.3
Performed prior to Shop Drawings and Samples submittals review	6.28
Remedies, cumulative	17.4, 17.5
Removal or Correction of Defective Work	13.11
rental agreements, OWNER approval required	11.4.5.3
replacement of PROFESSIONAL, by OWNER	8.2
Reporting/Resolving Discrepancies	2.5, 3.3.2, 6.14.2
Reports—	
and Drawings	4.2.1
and Tests, OWNER's responsibility	8.4
Resident Project Representative—	
definition of	1.33
provision for	9.3
Resident Superintendent, CONTRACTOR's	6.2
Responsibilities—	
CONTRACTOR's-in general	6
PROFESSIONAL's-in general	9
Limitations on	9.13
Moving of Structures	4.6
OWNER's-in general	8
Retainage	14.2
Reuse of Documents	3.7

	Article or Paragraph Number
Review by CONTRACTOR; Shop Drawings and Samples Prior to Submittal	6.25
Review of Applications for Progress Payments	14.4-14.7
Right to an adjustment	10.2
Rights of Way	4.1
Royalties, Patent Fees and	6.12
Safe Structural Loading	6.18
Safety—	
& Protection	4.3.2, 6.16, 6.18, 6.20-6.21, 7.2, 13.2
general	6.20-6.23
Representative, CONTRACTOR's	6.21
Samples—	
definition of	1.34
general	6.24-6.28
Review by CONTRACTOR	6.25
Review by PROFESSIONAL	6.26, 6.27
related Work	6.28
submittal of	6.24.2
submittal procedures	6.25
Schedule of progress	2.6, 2.8-2.9, 6.6, 6.29, 10.4, 15.2.1
Schedule of Shop Drawing and Sample Submittals	.6, 2.8-2.9, 6.24-6.28
Schedule of Values	2.6, 2.8-2.9, 14.1
Schedules—	
Adherence to	15.2.1
Adjusting	6.6
Change of Contract Times	10.4
Initially Acceptable	2.8-2.9
Preliminary	2.6
Scope of Changes	10.3-10.4
Subsurface Conditions	4.2.1.1
Shop Drawings—	
and Samples, general	6.24-6.28
Change Orders & Applications for Payments, and	9.7-9.9
definition of	1.35
PROFESSIONAL's approval of	3.6.2
PROFESSIONAL's responsibility for review	9.7, 6.24-6.28
related Work	6.28
review procedures	2.8, 6.24-6.28
submittal required	6.24.1
Submittal Procedures	6.25
use to approve substitutions	6.7.3
Shown or Indicated	4.3.1
Site Access	7.2, 13.2
Site Cleanliness	6.17
Site, Visits to—	
by PROFESSIONAL	9.2, 13.2
by others	13.2
Specifications—	
definition of	1.36
of Technical Societies, reference to	3.3.1
precedence	3.3.3
Standards and Specifications of Technical Societies	3.3
Starting Construction, Before	2.5-2.8
Starting the Work	2.4
Stop or Suspend Work—	
by CONTRACTOR	15.5

	Article or ***Paragraph Number***
by OWNER	8.8, 13.10, 15.1
Storage of materials and equipment	4.1, 7.2
Structural Loading, Safety	6.18
Subcontractor—	
Concerning	6.8-6.11
definition of	1.37
delays	12.3
waiver of rights	6.11
Subcontractors—in general	6.8-6.11
Subcontracts—required provisions	5.11, 6.11, 11.4.3
Submittals—	
Applications for Payment	14.2
Maintenance and Operation Manuals	14.12
Procedures	6.25
Progress Schedules	2.6, 2.9
Samples	6.24-6.28
Schedule of Values	2.6, 14.1
Schedule of Shop Drawings and Samples Submissions	2.6, 2.8-2.9
Shop Drawings	6.24-6.28
Substantial Completion—	
certification of	6.30.2.3, 14.8-14.9
definition of	1.38
Substitute Construction Methods or Procedures	6.7.2
Substitutes and "Or Equal" Items	6.7
CONTRACTOR's Expense	6.7.1.3
PROFESSIONAL's Evaluation	6.7.3
"Or-Equal"	6.7.1
Substitute Construction Methods of Procedures	6.7.2
Substitute Items	6.7.1.2
Subsurface and Physical Conditions—	
Drawings of, in or relating to	4.2.1.2
PROFESSIONAL's Review	4.2.4
general	4.2
Limited Reliance by CONTRACTOR Authorized	4.2.2
Notice of Differing Subsurface or Physical Conditions	4.2.3
Physical Conditions	4.2.1.2
Possible Contract Documents Change	4.2.5
Possible Price and Times Adjustments	4.2.6
Reports and Drawings	4.2.1
Subsurface and	4.2
Subsurface Conditions at the Site	4.2.11
Technical Data	4.2.2
Supervision—	
CONTRACTOR's responsibility	6.1
OWNER shall not supervise	8.9
PROFESSIONAL shall not supervise	9.2, 9.13.2
Superintendence	6.2
Superintendent, CONTRACTOR's resident	6.2
Supplemental costs	11.4.5
Supplementary Conditions—	
definition of	1.39
principal reference to	1.10, 1.18, 2.2, 4.2, 4.3, 5.1, 5.3, 5.4, 5.9, 5.11, 6.8, 6.13, 7.4, 8.11, 9.3, 9.10
Supplementing Contract Documents	3.6
Supplier—	
definition of	1.40

	Article or Paragraph Number
principal references to	3.7, 6.5, 6.8-6.11 6.20, 6.24, 9.13, 14.12
Waiver of Rights	6.11
Surety—	
consent to final payment	14.12, 14.14
PROFESSIONAL has no duty to	9.13
Notification of	10.1, 10.5, 15.2
qualification of	5.1-5.3
Survival of Obligations	6.34
Suspend Work, OWNER May	13.10, 15.1
Suspension of Work and Termination—	15
CONTRACTOR May Stop Work or Terminate	15.5
OWNER May Suspend Work	15.1
OWNER May Terminate	15.2-15.4
Taxes-Payment by CONTRACTOR	6.15
Technical Data—	
Limited Reliance by CONTRACTOR	4.2.2
Possible Price and Times Adjustments	4.2.6
Reports of Differing Subsurface and Physical Conditions	4.2.3
Temporary construction facilities	4.1
Termination—	
by CONTRACTOR	15.5
by OWNER	8.8, 15.1-15.4
of PROFESSIONAL's employment	8.2
Suspension of Work-in general	15
Terms and Adjectives	3.4
Tests and Inspections—	
Access to the Work, by others	13.2
CONTRACTOR's responsibilities	13.5
cost of	13.4
covering Work prior to	13.6-13.7
Laws and Regulations (or)	13.5
Notice of Defects	13.1
OWNER May Stop Work	13.10
OWNER's independent testing	13.4
special, required by PROFESSIONAL	9.6
timely notice required	13.4
Uncovering the Work, at PROFESSIONAL's request	13.8-13.9
Times—	
Adjusting	6.6
Change of Contract	12
Computation of	17.2
Contract Times—definition of	1.12
day	17.2.1
Milestones	12
Requirements—	
appeals	16
clarifications, claims and disputes	9.11, 11.2, 12
commencement of contract times	2.3
preconstruction conference	2.8
schedules	2.6, 2.9, 6.6
starting the Work	2.4
Title, Warranty of	14.3
Uncovering Work	13.8-13.9
Underground Facilities, Physical Conditions—	
definition of	1.41
Not Shown or Indicated	4.3.2
protection of	4.3, 6.20

	Article or ***Paragraph Number***
Shown or Indicated	4.3.1
Unit Price Work—	
claims	11.9
definition of	1.42
general	11.9, 14.1, 14.5
Unit Prices—	
general	11.3.1
Determination for	9.10
Use of Premises	6.16, 6.18, 6.30.2.4
Utility owners	6.13, 6.20, 7.1-7.3, 13.2
Utilization, Partial	1.28, 5.15, 6.30, 2.4, 14.10
Value of the Work	11.3
Values, Schedule of	2.6, 2.8-2.9, 14.1
Variations in Work—Minor	
Authorized	6.25, 6.27, 9.5
Visits of Site—by PROFESSIONAL	9.2
Waiver of Claims-on Final Payment	14.15
Waiver of Rights by insured parties	5.11, 6.11
Warranty and Guarantee, General—	
by CONTRACTOR	6.30
Warranty of Title, CONTRACTOR's	14.3
Work—	
Access to	13.2
by others,	7
Changes in the	10
Continuing the	6.29
CONTRACTOR May Stop Work or Terminate	15.5
Coordination of	7.4
Cost of the	11.4-11.5
definition of	1.43
neglected by CONTRACTOR	13.14
other Work	7
OWNER May Stop Work	13.10
OWNER May Suspend Work	13.10, 15.1
Related, Work at Site	7.1-7.3
Starting the	2.4
Stopping by CONTRACTOR	15.5
Stopping by OWNER	15.1-15.4
Variation and deviation authorized, minor	3.6
Work Change Directive—	
claims pursuant to	10.2
definition of	1.44
principal references to	3.5.3, 10.1-10.2
Written Amendment—	
definition of	1.45
principal references to	1.10, 3.5, 5.10, 5.12, 6.6.2, 6.8.2, 6.19, 10.1, 10.4, 11.2, 12.1, 13.12.2, 14.7.2
Written Clarifications/Interpretations	3.6.3, 9.4, 9.11
Written Notice Required—	
by CONTRACTOR	7.1, 9.10-9.11, 10.4, 11.2, 12.1
by OWNER	9.10-9.11, 10.4, 11.2, 13.14

GENERAL CONDITIONS

ARTICLE 1——DEFINITIONS

Wherever used in these General Conditions or in the other Contract Documents the following terms have the meanings indicated which are applicable to both the singular and plural thereof:

1.1. *Addenda*—-Written or graphic instruments issued prior to the opening of Bids which clarify, correct or change the Bidding Requirements or the Contract Documents.

1.2. *Agreement*——The written contract between OWNER and CONTRACTOR covering the Work to be performed; other Contract Documents are attached to the Agreement and made a part thereof as provided therein.

1.3. *Application for Payment*——The form accepted by PROFESSIONAL which is to be used in requesting progress or final payments and which is to be accompanied by such supporting documentation as is required by the Contract Documents.

1.4. *Asbestos*——Any material that contains more than one percent asbestos and is friable or is releasing asbestos fibers into the air above current action levels established by the United States Occupational Safety and Health Administration.

1.5. *Bid*——The offer or proposal of the bidder submitted on the prescribed form setting forth the prices for the Work to be performed.

1.6. *Bidding Documents*——The advertisement or invitation to Bid, instructions to bidders, the Bid form and the proposed Contract Documents (including all Addenda issued prior to receipt of Bids).

1.7. *Bidding Requirements*——The advertisement or invitation to Bid, instructions to bidders and the Bid form.

1.8. *Bonds*——Performance and Payment bonds and other instruments of security.

1.9. *Change Order*——A document recommended by PROFESSIONAL, which is signed by CONTRACTOR and OWNER and authorizes an

addition, deletion or revision in the Work, or an adjustment in the Contract Price or the Contract Times, issued on or after the Effective Date of the Agreement.

1.10. *Contract Documents*——The Agreement, Addenda (which pertain to the Contract Documents), CONTRACTOR's Bid (including documentation accompanying the Bid and any post Bid documentation submitted prior to the Notice of Award) when attached as an exhibit to the Agreement, the Notice to Proceed, the Bonds, these General Conditions, the Supplementary Conditions, the Specifications and the Drawings as the same are more specifically identified in the Agreement, together with all Written Amendments, Change Orders, Work Change Directives, Field Orders and PROFESSIONAL's written interpretations and clarifications issued pursuant to paragraphs 3.5, 3.6.1, and 3.6.3 on or after the Effective Date of the Agreement. Shop Drawing submittals approved pursuant to paragraphs 6.26 and 6.27 and the reports and drawings referred to in paragraphs 4.2.1.1 and 4.2.2.2 are not Contract Documents.

1.11. *Contract Price*——The moneys payable by OWNER to CONTRACTOR for completion of the Work in accordance with the Contract Documents as stated in the Agreement (subject to the provisions of paragraph 11.9.1 in the case of Unit Price Work).

1.12. *Contract Times*——The numbers of days or the dates stated in the Agreement: (i) to achieve Substantial Completion and (ii) to complete the Work so that it is ready for final payment as evidenced by PROFESSIONAL's written recommendation of final payment in accordance with paragraph 14.13.

1.13. *CONTRACTOR*——The person, firm or corporation with whom OWNER has entered into the Agreement.

1.14. *defective*——An adjective which when modifying the word Work refers to Work that is unsatisfactory, faulty or deficient, in that it does not conform to the Contract Documents, or does not meet the requirements of any inspection, reference standard, test or approval referred to in the Contract Documents, or has been damaged prior to PROFESSIONAL's recommendation of final payment (unless responsibility for the protection thereof has been assumed by OWNER at Substantial Completion in accordance with paragraph 14.8 or 14.10).

1.15. *Drawings*——The drawings which show the scope, extent and character of the Work to be furnished and performed by CONTRACTOR and which have been prepared or approved by PROFESSIONAL and are referred to in the Contract Documents. Shop drawings are not Drawings as so defined.

1.16. *Effective Date of the Agreement*——The date indicated in the Agreement on which it becomes effective, but if no such date is indicated it means the date on which the Agreement is signed and delivered by the last of the two parties to sign and deliver.

1.17. *Field Order*——A written order issued by PROFESSIONAL which orders minor changes in the Work in accordance with paragraph 9.5 but which does not involve a change in the Contract Price or the Contract Times.

1.18. *General Requirements*——Sections of Division 1 of the Specifications.

1.19. *Hazardous Waste*——The term Hazardous Waste shall have the meaning provided in Section 1004 of the Solid Waste Disposal Act (42 USC Section 6903) as amended from time to time.

1.20. *Laws and Regulations; Laws or Regulations*——Any and all applicable laws, rules, regulations, ordinances, codes and orders of any and all governmental bodies, agencies, authorities and courts having jurisdiction.

1.21. *Liens*——Liens, charges, security interests or encumbrances upon real property or personal property.

1.22. *Milestone*——A principal event specified in the Contract Documents relating to an intermediate completion date or time prior to Substantial Completion of all the Work.

1.23. *Notice of Award*——The written notice by OWNER to the apparent successful bidder stating that upon compliance by the apparent successful bidder with the conditions precedent enumerated therein, within the time specified, OWNER will sign and deliver the Agreement.

1.24. *Notice to Proceed*——A written notice given by OWNER to CONTRACTOR (with a copy to PROFESSIONAL) fixing the date on which the Contract Times will commence to run and on which

CONTRACTOR shall start to perform CONTRACTOR's obligations under the Contract Documents.

1.25. *OWNER*——The public body or authority, corporation, association, firm or person with whom CONTRACTOR has entered into the Agreement and for whom the Work is to be provided.

1.26. *Partial Utilization*——Use by OWNER of a substantially completed part of the Work for the purpose for which it is intended (or a related purpose) prior to Substantial Completion of all the Work.

1.27. *PCB's*——Polychlorinated biphenyls.

1.28. *Petroleum*——Petroleum, including crude oil or any fraction thereof which is liquid at standard conditions of temperature and pressure (60 degrees Fahrenheit and 14.7 pounds per square inch absolute), such as oil, petroleum, fuel oil, oil sludge, oil refuse, gasoline, kerosene, and oil mixed with other non-Hazardous Wastes and crude oils.

1.29. *PROFESSIONAL*——The person, firm or corporation named as such in the Agreement, performing as the Architect, Engineer, or Planner.

1.30. *PROFESSIONAL's Consultant*——A person, firm or corporation having a contract with PROFESSIONAL to furnish services as PROFESSIONAL's independent professional associate or consultant with respect to the Project and who is identified as such in the Supplementary Conditions.

1.31. *Project*——The total construction of which the Work to be provided under the Contract Documents may be the whole, or a part as indicated elsewhere in the Contract Documents.

1.32. *Radioactive Material*——Source, special nuclear, or byproduct material as defined by the Atomic Energy Act of 1954 (42 USC Section 2011 et seq.) as amended from time to time.

1.33. *Resident Project Representative*——The authorized representative of PROFESSIONAL who may be assigned to the site or any part thereof.

1.34. *Samples*——Physical examples of materials, equipment, or workmanship that are representative of some portion of the Work and which establish the standards by which such portion of the Work will be judged.

1.35. *Shop Drawings*——All drawings, diagrams, illustrations, schedules and other data or information which are specifically prepared or assembled by or for CONTRACTOR and submitted by CONTRACTOR to illustrate some portion of the Work.

1.36. *Specifications*——Those portions of the Contract Documents consisting of written technical descriptions of materials, equipment, construction systems, standards and workmanship as applied to the Work and certain administrative details applicable thereto.

1.37. *Subcontractor*——An individual, firm or corporation having a direct contract with CONTRACTOR or with any other Subcontractor for the performance of a part of the Work at the site.

1.38. *Substantial Completion*——The Work (or a specified part thereof) has progressed to the point where, in the opinion of PROFESSIONAL as evidenced by PROFESSIONAL's definitive certificate of Substantial Completion, it is sufficiently complete, in accordance with the Contract Documents, so that the Work (or specified part) can be utilized for the purposes for which it is intended; or if no such certificate is issued, when the Work is complete and ready for final payment as evidenced by PROFESSIONAL's written recommendation of final payment in accordance with paragraph 14.13. The terms "substantially complete" and "substantially completed" as applied to all or part of the Work refer to Substantial Completion thereof.

1.39. *Supplementary Conditions*——The part of the Contract Documents which amends or supplements these General Conditions.

1.40. *Supplier*——A manufacturer, fabricator, supplier, distributor, materialman or vendor having a direct contract with CONTRACTOR or with any Subcontractor to furnish materials or equipment to be incorporated in the Work by CONTRACTOR or any Subcontractor.

1.41. *Underground Facilities*——All pipelines, conduits, ducts, cables, wires, manholes, vaults, tanks, tunnels or other such facilities or attachments, and any encasements containing such facilities which have been installed underground to furnish any of the following services or materials: electricity, gases, steam, liquid petroleum products, telephone or other communications, cable television, sewage and drainage removal, traffic or other control systems or water.

1.42. *Unit Price Work*——Work to be paid for on the basis of unit prices.

1.43. *Work*——The entire completed construction or the various separately identifiable parts thereof required to be furnished under the Contract Documents. Work includes and is the result of performing or furnishing labor and furnishing and incorporating materials and equipment into the construction, and performing or furnishing services and furnishing documents, all as required by the Contract Documents.

1.44. *Work Change Directive*——A written directive to CONTRACTOR, issued on or after the Effective Date of the Agreement and signed by OWNER and recommended by PROFESSIONAL, ordering an addition, deletion or revision in the Work, or responding to differing or unforeseen physical conditions under which the Work is to be performed as provided in paragraph 4.2 or 4.3 or to emergencies under paragraph 6.23. A Work Change Directive will not change the Contract Price or the Contract Times, but is evidence that the parties expect that the change directed or documented by a Work Change Directive will be incorporated in a subsequently issued Change Order following negotiations by the parties as to its effect, if any, on the Contract Price or Contract Times as provided in paragraph 10.2.

1.45. *Written Amendment*——A written amendment of the Contract Documents, signed by OWNER and CONTRACTOR on or after the Effective Date of the Agreement and normally dealing with the nonengineering or nontechnical rather than strictly construction-related aspects of the Contract Documents.

ARTICLE 2——PRELIMINARY MATTERS

***Delivery of Bonds**:*

2.1. When CONTRACTOR delivers the executed Agreements to OWNER, CONTRACTOR shall also deliver to OWNER such Bonds as CONTRACTOR may be required to furnish in accordance with paragraph 5.1.

Copies of Documents:

2.2. OWNER shall furnish to CONTRACTOR up to ten copies (unless otherwise specified in the Supplementary Conditions) of the Contract Documents as are reasonably necessary for the execution of the Work. Additional copies will be furnished, upon request, at the cost of reproduction.

Commencement of Contract Times; Notice to Proceed:

2.3. The Contract Times will commence to run on the thirtieth day after the Effective Date of the Agreement, or, if a Notice to Proceed is given, on the day indicated in the Notice to Proceed.

Starting the Work:

2.4. CONTRACTOR shall start to perform the Work on the date when the Contract Times commence to run, but no Work shall be done at the site prior to the date on which the Contract Times commence to run.

Before Starting Construction:

2.5. Before undertaking each part of the Work, CONTRACTOR shall carefully study and compare the Contract Documents and check and verify pertinent figures shown thereon and all applicable field measurements. CONTRACTOR shall promptly report in writing to PROFESSIONAL any conflict, error, ambiguity or discrepancy which CONTRACTOR may discover and shall obtain a written interpretation or clarification from PROFESSIONAL before proceeding with any Work affected thereby; however, CONTRACTOR shall not be liable to OWNER or PROFESSIONAL for failure to report any conflict, error, ambiguity or discrepancy in the Contract Documents, unless CONTRACTOR knew or reasonably should have known thereof.

2.6 Within ten days after the Effective Date of the Agreement (unless otherwise specified in the General Requirements), CONTRACTOR shall submit to PROFESSIONAL for review:

2.6.1. a preliminary progress schedule indicating the times (numbers of days or dates) for starting and completing the various stages of the Work, including any Milestones specified in the Contract Documents;

2.6.2. a preliminary schedule of Shop Drawing and Sample submittals which will list each required submittal and the times for submitting, reviewing and processing such submittal;

2.6.3. a preliminary schedule of values for all of the Work which will include quantities and prices of items aggregating the Contract Price and will subdivide the Work into component parts in sufficient detail to serve as the basis for progress payments during construction. Such prices will include an appropriate amount of overhead and profit applicable to each item of Work.

2.7. N/A

Preconstruction Conference:

2.8. Within twenty days after the Contract Times start to run, but before any Work at the site is started, a conference attended by CONTRACTOR, PROFESSIONAL and others as appropriate will be held to establish a working understanding among the parties as to the Work and to discuss the schedules referred to in paragraph 2.6, procedures for handling Shop Drawings and other submittals, processing Applications for Payment and maintaining required records.

Initially Acceptable Schedules:

2.9. Unless otherwise provided in the Contract Documents, at least ten days before submission of the first Application for Payment a conference attended by CONTRACTOR, PROFESSIONAL and others as appropriate will be held to review for acceptability to PROFESSIONAL as provided below the schedules submitted in accordance with paragraph 2.6. CONTRACTOR shall have an additional ten days to make corrections and adjustments and to complete and resubmit the schedules. No progress payment shall be made to CONTRACTOR until the schedules are submitted to and acceptable to PROFESSIONAL as provided below. The progress schedule will be acceptable to PROFESSIONAL as providing an orderly progression of the Work to completion within any specified Milestones and the Contract Times, but such acceptance will neither impose on PROFESSIONAL responsibility for the sequencing, scheduling or progress of the work nor interfere with or relieve CONTRACTOR from CONTRACTOR's full responsibility therefor. CONTRACTOR's schedule of Shop Drawing and Sample submissions will be acceptable to PROFESSIONAL as providing a workable arrangement for reviewing and processing the required submittals. CONTRACTOR's schedule of values will be acceptable to PROFESSIONAL as to form and substance.

ARTICLE 3——CONTRACT DOCUMENTS: INTENT, AMENDING, REUSE

Intent:

3.1. The Contract Documents comprise the entire agreement between OWNER and CONTRACTOR concerning the Work. The Contract Documents are complementary; what is called for by one is as binding as if called for by all. The Contract Documents will be construed in accordance with the law of the place of the Project.

3.2. It is the intent of the Contract Documents to describe a functionally complete Project (or part thereof) to be constructed in accordance with the Contract Documents. Any Work, materials or equipment that may reasonably be inferred from the Contract Documents or

from prevailing custom or trade usage as being required to produce the intended result will be furnished and performed whether or not specifically called for. When words or phrases which have a well-known technical or construction industry or trade meaning are used to describe Work, materials or equipment, such words or phrases shall be interpreted in accordance with that meaning. Clarifications and interpretations of the Contract Documents shall be issued by PROFESSIONAL as provided in paragraph 9.4.

3.3. ***Reference to Standards and Specifications of Technical Societies; Reporting and Resolving Discrepancies:***

3.3.1. Reference to standards, specifications, manuals or codes of any technical society, organization or association, or to the Laws or Regulations of any governmental authority, whether such reference be specific or by implication, shall mean the latest standard, specification, manual, code or Laws or Regulations in effect at the time of opening of Bids (or, on the Effective Date of the Agreement if there were no Bids), except as may be otherwise specifically stated in the Contract Documents.

3.3.2. If, during the performance of the Work, CONTRACTOR discovers any conflict, error, ambiguity or discrepancy within the Contract Documents or between the Contract Documents and any provision of any such Law or Regulation applicable to the performance of the Work or of any such standard, specification, manual or code or of any instruction of any Supplier referred to in paragraph 6.5, CONTRACTOR shall report it to PROFESSIONAL in writing at once, and, CONTRACTOR shall not proceed with the Work affected thereby (except in an emergency as authorized by paragraph 6.23) until an amendment or supplement to the Contract Documents has been issued by one of the methods indicated in paragraph 3.5 or 3.6; provided, however, that CONTRACTOR shall not be liable to OWNER or PROFESSIONAL for failure to report any such conflict, error, ambiguity or discrepancy unless CONTRACTOR knew or reasonably should have known thereof.

3.3.3. Except as otherwise specifically stated in the Contract Documents or as may be provided by amendment or supplement thereto issued by one of the methods indicated in paragraph 3.5 or 3.6, the provisions of the Contract Documents shall take precedence in resolving any conflict, error, ambiguity or discrepancy between the provisions of the Contract Documents and:

3.3.3.1. the provisions of any such standard, specification, manual, code or instruction (whether or not specifically incorporated by reference in the Contract Documents); or

3.3.3.2. the provisions of any such Laws or Regulations applicable to the performance of the Work (unless such an interpretation of the provisions of the Contract Documents would result in violation of such Law or Regulation).

No provision of any such standard, specification, manual, code or instruction shall be effective to change the duties and responsibilities of OWNER, CONTRACTOR or PROFESSIONAL, or any of their subcontractors, consultants, agents, or employees from those set forth in the Contract Documents, nor shall it be effective to assign to OWNER, PROFESSIONAL or any of PROFESSIONAL's Consultants, agents or employees any duty or authority to supervise or direct the furnishing or performance of the Work or any duty or authority to undertake responsibility inconsistent with the provisions of paragraph 9.13 or any other provision of the Contract Documents.

3.4. Whenever in the Contract Documents the terms "as ordered," "as directed," "as required," "as allowed," "as approved" or terms of like effect or import are used, or the adjectives "reasonable," "suitable," "acceptable," "proper" or "satisfactory" or adjectives of like effect or import are used to describe a requirement, direction, review or judgment of PROFESSIONAL as to the Work, it is intended that such requirement, direction, review or judgment will be solely to evaluate, in general, the completed Work for compliance with the requirements of and information in the Contract Documents and conformance with the design concept of the completed Project as a functioning whole as shown or indicated in the Contract Documents (unless there is a specific statement indicating otherwise). The use of any such term or adjective shall not be effective to assign to PROFESSIONAL any duty or authority to supervise or direct the furnishing or performance of the Work or any duty or authority to undertake responsibility contrary to the provisions of paragraph 9.13 or any other provision of the Contract Documents.

Amending and Supplementing Contract Documents:

3.5. The Contract Documents may be amended to provide for additions, deletions and revisions in the Work or to modify the terms and conditions thereof in one or more of the following ways:

3.5.1. a formal Written Amendment,

3.5.2. a Change Order (pursuant to paragraph 10.4), or

3.5.3. a Work Change Directive (pursuant to paragraph 10.1).

3.6 In addition, the requirements of the Contract Documents may be supplemented, and minor variations and deviations in the Work may be authorized, in one or more of the following ways:

3.6.1. a Field Order (pursuant to paragraph 9.5),

3.6.2. PROFESSIONAL's approval of a Shop Drawing or Sample (pursuant to paragraphs 6.26 and 6.27), or

3.6.3. PROFESSIONAL's written interpretation or clarification (pursuant to paragraph 9.4).

Reuse of Documents:

3.7. CONTRACTOR, and any Subcontractor or Supplier or any other person or organization performing or furnishing any of the Work under a direct or indirect contract with OWNER (i) shall not have or acquire any title to or ownership rights in any of the Drawings, Specifications or other documents (or copies of any thereof) prepared by or bearing the seal of PROFESSIONAL or PROFESSIONAL's Consultant, and (ii) shall not reuse any of such Drawings, Specifications, other documents or copies on extensions of the Project or any other project without written consent of OWNER and PROFESSIONAL and specific written verification or adaption by PROFESSIONAL.

ARTICLE 4——AVAILABILITY OF LANDS; SUBSURFACE AND PHYSICAL CONDITIONS; REFERENCE POINTS

Availability of Lands:

4.1. OWNER shall furnish, as indicated in the Contract Documents, the lands upon which the Work is to be performed, rights-of-way and easements for access thereto, and such other lands which are designated for the use of CONTRACTOR. Upon reasonable written request, OWNER shall furnish CONTRACTOR with a correct statement of record legal title and legal description of lands upon which the Work is to be performed and OWNER's interest therein as necessary for giving notice of or filing a mechanic's lien against such lands in accordance with applicable Laws and Regulations. OWNER shall identify any encumbrances or restrictions not of general application but specifically related to use of lands so furnished with which CONTRACTOR will have to comply in performing the Work. Easements for permanent structures or permanent changes in existing facilities will be obtained and paid for by OWNER, unless otherwise provided in the Contract Documents. CONTRACTOR shall provide for all additional lands and access thereto that may be required for temporary construction facilities or storage of materials and equipment.

Protection of Land Monuments and Property Stakes. Land Monuments or lot stakes marking property corners shall not be moved or otherwise disturbed except as directed by PROFESSIONAL. When they occur within the area of concrete base or pavement, they shall be enclosed as specified by the PROFESSIONAL; such work to be paid for by the OWNER. When, in the judgment of the PROFESSIONAL, land monuments or property lot stakes can be saved, all such stakes shall be marked by the CONTRACTOR in a manner agreed to by the PROFESSIONAL and CONTRACTOR, after which the CONTRACTOR shall protect such land monuments or lot stakes from injury. If any land monuments or lot stakes are moved or disturbed by the CONTRACTOR after their locations have been marked in a manner acceptable to the PROFESSIONAL and CONTRACTOR, then the CONTRACTOR agrees that $500.00 for each and every land monument or lot stake so moved or disturbed may be deducted from any money due to him as a payment to the OWNER for the cost of replacing or resetting said land monument or lot stake.

4.2. ***Subsurface and Physical Conditions:***

It is understood by the CONTRACTOR that if any reports or drawings containing "technical data" were utilized by the PROFESSIONAL regarding subsurface conditions per paragraph 4.2.1.1 of the General Conditions or physical conditions per paragraph 4.2.1.2 of the General Conditions then these reports and drawings would be identified in SC 4.2.1 and no where else in the Contract Documents.

4.2.1. *Reports and Drawings:* Reference is made to the Supplementary Conditions for identification of:

4.2.1.1. *Subsurface Conditions:* Those reports of explorations and tests of subsurface conditions at or contiguous to the site that have been utilized by PROFESSIONAL in preparing the Contract Documents; and

4.2.1.2. *Physical Conditions:* Those drawings of physical conditions in or relating to existing surface or subsurface structures at or contiguous to the site (except Underground Facilities) that have been utilized by PROFESSIONAL in preparing the Contract Documents.

4.2.2. *Limited Reliance by CONTRACTOR Authorized; Technical Data:* CONTRACTOR may rely upon the general accuracy of the "technical data" contained in such reports and drawings, but such reports and drawings are not Contract Documents. Such "technical data" is identified in the Supplementary Conditions. Except for such reliance on such "technical data," CONTRACTOR may not rely upon or make any claim against OWNER, PROFESSIONAL or any of PROFESSIONAL's Consultants with respect to:

4.2.2.1. the completeness of such reports and drawings for CONTRACTOR's purposes, including, but not limited to, any aspects of the means, methods, techniques, sequences and procedures of construction to be employed by CONTRACTOR and safety precautions and programs incident thereto, or

4.2.2.2. other data, interpretations, opinions and information contained in such reports or shown or indicated in such drawings, or

4.2.2.3. any CONTRACTOR interpretation of or conclusion drawn from any "technical data" or any such data, interpretations, opinions or information.

4.2.3. *Notice of Differing Subsurface or Physical Conditions:* If CONTRACTOR believes that any subsurface or physical condition at or contiguous to the site that is uncovered or revealed either:

4.2.3.1 is of such a nature as to establish that any "technical data" on which CONTRACTOR is entitled to rely as provided in paragraphs 4.2.1 and 4.2.2 is materially inaccurate, or

4.2.3.2. is of such a nature as to require a change in the Contract Documents, or

4.2.3.3. differs materially from that shown or indicated in the Contract Documents, or

4.2.3.4. is of an unusual nature, and differs materially from conditions ordinarily encountered and generally recognized as inherent in work of the character provided for in the Contract Documents; then

CONTRACTOR shall, promptly after becoming aware thereof and before further disturbing conditions affected thereby or performing any Work in connection therewith (except in an emergency as permitted by paragraph 6.23), notify OWNER and PROFESSIONAL in writing about such condition. CONTRACTOR shall not further disturb such conditions or perform any Work in connection therewith (except as aforesaid) until receipt of written order to do so.

4.2.4. *PROFESSIONAL's Review:* PROFESSIONAL will promptly review the pertinent conditions, determine the necessity of OWNER's obtaining additional exploration or tests with respect thereto and advise OWNER in writing (with a copy to CONTRACTOR) of PROFESSIONAL's findings and conclusions.

4.2.5. *Possible Contract Documents Change:* If PROFESSIONAL concludes that a change in the Contract Documents is required as a result of a condition that meets one or more of the categories in paragraph 4.2.3., a Work Change Directive or a Change Order will be issued as provided in Article 10 to reflect and document the consequences of such change.

4.2.6. *Possible Price and Times Adjustments:* An equitable adjustment in the Contract Price or in the Contract Times, or both, will be allowed to the extent that the existence of such uncovered or revealed condition causes an increase or decrease in CONTRACTOR's cost of, or time required for performance of, the Work; subject, however, to the following:

4.2.6.1. Such Condition must meet any one or more of the categories described in paragraphs 4.2.3.1 through 4.2.3.4, inclusive;

4.2.6.2. A change in the Contract Documents pursuant to paragraph 4.2.5 will not be an automatic authorization of nor a condition precedent to entitlement to any such adjustment;

4.2.6.3. With respect to Work that is paid for on a Unit Price Basis, any adjustment in Contract Price will be subject to the provisions of paragraphs 9.10 and 11.9; and

4.2.6.4. CONTRACTOR shall not be entitled to any adjustment in the Contract Price or Times if;

4.2.6.4.1. CONTRACTOR knew of the existence of such conditions at the time CONTRACTOR made a final commitment to OWNER in respect of Contract Price and Contract Times by the submission of a bid or becoming bound under a negotiated contract; or

4.2.6.4.2. The existence of such condition could reasonably have been discovered or revealed as a result of any examination, investigation, exploration, test or study of the site and contiguous areas required by the Bidding Requirements or Contract Documents to be conducted by or for CONTRACTOR prior to CONTRACTOR's making such final commitment; or

4.2.6.4.3. CONTRACTOR failed to give the written notice within the time and as required by paragraph 4.2.3.

If OWNER and CONTRACTOR are unable to agree on entitlement to or as to the amount or length of any such equitable adjustment in the Contact Price or Contract Times, a claim may be made therefor as provided in Articles 11 and 12. However, OWNER, PROFESSIONAL and PROFESSIONAL's Consultants shall not be liable to CONTRACTOR for any claims, costs, losses or damages sustained by CONTRACTOR or damages sustained by CONTRACTOR on or in connection with any other project or anticipated project.

4.3. ***Physical Conditions——Underground Facilities:***

4.3.1. *Shown or Indicated:* The information and data shown or indicated in the Contract Documents with respect to existing Underground Facilities at or contiguous to the site is based on information and data furnished to OWNER or PROFESSIONAL by the owners of such Underground Facilities or by others. Unless it is otherwise expressly provided in the Supplementary Conditions:

4.3.1.1. OWNER and PROFESSIONAL shall not be responsible for the accuracy or completeness of any such information or data; and

4.3.1.2. The cost of all the following will be included in the Contract Price and CONTRACTOR shall have full responsibility for: (i) reviewing and checking all such information and data, (ii) locating all Underground Facilities shown or indicated in the Contract Documents, (iii) coordination of the Work with the owners of such Underground Facilities during construction, and (iv) the safety and protection of all such Underground Facilities as provided in paragraph 6.20 and repairing any damage thereto resulting from the Work.

4.3.2. *Not Shown or Indicated:* If an Underground Facility is uncovered or revealed at or contiguous to the site which was not shown or indicated in the Contract Documents, CONTRACTOR shall, promptly after becoming aware thereof and before further disturbing conditions affected thereby or performing any Work in connection therewith (except in an emergency as required by paragraph 6.23), identify the owner of such Underground Facility and give written notice to that owner and to OWNER and PROFESSIONAL, PROFESSIONAL will promptly review the Underground Facility and determine the extent, if any, to which a change is required in the Contract Documents to reflect and document the consequences of the existence of the Underground Facility. If PROFESSIONAL concludes that a change in the Contract Documents is required, a Work Change Directive or a Change Order will be issued as provided in Article 10 to reflect and document such consequences. During such time, CONTRACTOR shall be responsible for the safety and protection of such Underground Facility as provided in paragraph 6.20. CONTRACTOR shall be allowed an increase in the Contract Price or an extension of the Contract Times, or both, to the extent that they are attributable to the existence of any Underground Facility that was not shown or indicated in the Contract Documents and that CONTRACTOR did not know of and could not reasonably have been expected to be aware of or to have anticipated.

If OWNER and CONTRACTOR are unable to agree on entitlement to or the amount or length of any such adjustment in Contract Price or Contract Times, CONTRACTOR may make a claim therefor as provided in Articles 11 and 12. However, OWNER, PROFESSIONAL and PROFESSIONAL's Consultants shall not be liable to CONTRACTOR for any claims, costs, losses or damages incurred or sustained by

CONTRACTOR on or in connection with any other projects OR anticipated projects.

Reference Points:

4.4. OWNER may provide engineering surveys to establish reference points for construction which in PROFESSIONAL's judgment are necessary to enable

CONTRACTOR to proceed with the Work. CONTRACTOR is referred to Section 6 of the Proposal (Bid Form) for information regarding the type and level or extent of engineering surveys including reference marks and layout that the OWNER may provide. CONTRACTOR shall protect and preserve the established reference points and shall make no changes or relocations without the prior written approval of OWNER. CONTRACTOR shall report to PROFESSIONAL whenever any reference point is lost or destroyed or requires relocation because of necessary changes in grades or locations, and shall be responsible for the accurate replacement or relocation of such reference points by professionally qualified personnel. CONTRACTOR is responsible for the protection, replacement and relocation of all reference points and layout work (staking) provided by the OWNER or the PROFESSIONAL. If the OWNER or PROFESSIONAL has to return to the site a second time or more to reset reference points or layout work (staking) destroyed or rendered inaccurate as a result of the CONTRACTOR's negligent or careless activities then the cost of the OWNER or PROFESSIONAL to reset the reference points or layout work (staking) shall be deducted from the final progress payment to the CONTRACTOR by the OWNER, if applicable.

4.5. ***Asbestos, PCB's, Petroleum, Hazardous Waste or Radioactive Material:***

4.5.1. OWNER shall be responsible for any Asbestos, PCB's, Petroleum, Hazardous Waste or Radioactive Material uncovered or revealed at the site which was not shown or indicated in Drawings or Specifications or identified in the Contract Documents to be within the scope of the Work and which may present a substantial danger to persons or property exposed thereto in connection with the Work at the site. OWNER shall not be responsible for any such materials brought to the site by CONTRACTOR, Subcontractor, Suppliers or anyone else for whom CONTRACTOR is responsible.

4.5.2. CONTRACTOR shall immediately: (i) stop all Work in connection with such hazardous condition and in any area affected thereby (except in an emergency as required by paragraph 6.23), and (ii) notify OWNER and PROFESSIONAL (and thereafter confirm such notice in writing). OWNER shall promptly consult with PROFESSIONAL concerning the necessity for OWNER to retain a qualified expert to evaluate such hazardous condition or take corrective action, if any. CONTRACTOR shall not be required to resume Work in connection with such hazardous condition or in any such affected area until after OWNER has obtained any required permits related thereto and delivered to CONTRACTOR special written notice; (i) specifying that such condition and any affected area is or has been rendered safe for the resumption of Work, or (ii) specifying any special conditions under which such Work may be resumed safely. If OWNER and CONTRACTOR cannot agree as to entitlement to or the amount or extent of an adjustment, if any, in Contract Price or Contract Times as a result of such Work stoppage or such special conditions under which Work is agreed by CONTRACTOR to be resumed, either party may make a claim therefor as provided in Articles 11 and 12.

4.5.3. If after receipt of such special written notice CONTRACTOR does not agree to resume such Work based on a reasonable belief it is unsafe, or does not agree to resume such Work under such special conditions, then OWNER may order such portion of the Work that is in connection with such hazardous condition or in such affected area to be deleted from the Work. If OWNER and CONTRACTOR cannot agree as to entitlement to or the amount or extent of an adjustment, if any, in Contract Price or Contract Times as a result of deleting such portion of the Work, then either party may make a claim therefor as provided in Articles 11 and 12. OWNER may have such deleted portion of the Work performed by OWNER's own forces or others in accordance with Article 7.

4.5.4. To the fullest extent permitted by Laws and Regulations, OWNER shall indemnify and hold harmless CONTRACTOR, Subcontractors, PROFESSIONAL, PROFESSIONAL's Consultants and the officers, directors, employees, agents, other consultants and subcontractors of each and any of them from and against all claims, costs, losses and damages arising out of or resulting from such hazardous condition, provided that: (i) any such claim, cost, loss or damage is attributable to bodily injury, sickness, disease or death, or to injury to or destruction of tangible property (other than the Work itself), including the loss of use resulting therefrom, and (ii) nothing in this subparagraph 4.5.4 shall obligate OWNER to indemnify any person or entity from and against the consequences of that person's or entity's own negligence.

4.5.5. The provisions of paragraphs 4.2 and 4.3 are not intended to apply to Asbestos, PCB's, Petroleum, Hazardous Waste or Radioactive Material uncovered or revealed at the site.

4.5.6. The above procedures outlined in paragraph 4.5 shall be used if the site on which any Asbestos, PCB's, Petroleum, Hazardous Waste or Radioactive Material is uncovered or revealed is owned and controlled by the OWNER. On sites not owned and controlled by the OWNER, the PROFESSIONAL,

OWNER & CONTRACTOR agree that upon uncovering or revealing Asbestos, PCB's, Petroleum, Hazardous Waste or Radioactive Material it will the OWNER's responsibility to notify the site's property owner of the discovery.

4.6 ***Responsibility for Moving of Structures:*** Any buildings, poles, conduits, manholes, catchbasins, valve boxes, trees, water mains and services, storm and sanitary sewers, gas mains and services or other structures which in the opinion of the PROFESSIONAL will have to be moved or changed by the CONTRACTOR, in order to permit the proper construction of the work or will be moved or changed by the respective OWNERs, if that is their practice, at the insistence of the OWNER, unless otherwise specifically stated in the contract documents, but any such structures which, in the opinion of the PROFESSIONAL, can be left without being disturbed, shall be left and the CONTRACTOR shall take all necessary precautions for their protection and he will be held fully responsible for their protection. All costs resulting from the moving of such structures shall be borne by the CONTRACTOR and shall be included in the unit prices or lump sums bid for the work.

ARTICLE 5——BONDS AND INSURANCE

Performance, Payment and Other Bonds:

5.1. CONTRACTOR shall furnish Performance and Payment Bonds, each in an amount at least equal to the Contract Price as security for the faithful performance and payment of all CONTRACTOR's obligations under the Contract Documents. These Bonds shall remain in effect at least until one year after the date when final payment becomes due, except as provided otherwise by Laws or Regulations or by the Contract Documents. CONTRACTOR shall also furnish such other Bonds as are required by the Supplementary Conditions. All Bonds shall be in the form prescribed by the Contract Documents except as provided otherwise by Laws or Regulations, and shall be executed by such sureties as are named in the current list of "Companies Holding Certificates of Authority as Acceptable Sureties on Federal Bonds and as Acceptable Reinsuring Companies" as published in Circular 570 (amended) by the Audit Staff, Bureau of Government Financial Operations, U.S. Treasury Department. All Bonds signed by an agent must be accompanied by a certified copy of such agent's authority to act.

All insurance required by the Contract Documents to be purchased and maintained by CONTRACTOR shall be obtained from surety or insurance companies that are authorized to transact business in Michigan and are classified at not lower than each of the following:

5.1.1. Best's Key Rating Guide, current edition:

(1) Rating Classification: A-
(2) Financial Size Category: Class V.

5.2. If the surety on any Bond furnished by CONTRACTOR is declared bankrupt or becomes insolvent or its right to do business is terminated in any state where any part of the Project is located or it ceases to meet the requirements of paragraph 5.1, CONTRACTOR shall within ten days thereafter substitute another Bond and surety, both of which must be acceptable to OWNER.

5.3. ***Licensed Sureties and Insurers; Certificates of Insurance:***

5.3.1. All Bonds and insurance required by the Contract Documents to be purchased and maintained by OWNER or CONTRACTOR shall be obtained from surety or insurance companies that are duly licensed or authorized in the jurisdiction in which the Project is located to issue Bonds or insurance policies for the limits and coverages so required. Such surety and insurance companies shall also meet such additional requirements and qualifications as may be provided in the Supplementary Conditions.

5.3.2. CONTRACTOR shall deliver to OWNER, with copies to each additional insured identified in the Insurance Coverages, certificates of insurance (and other evidence of insurance requested by OWNER or any other additional insured) which CONTRACTOR is required to purchase and maintain in accordance with paragraph 5.4. OWNER shall deliver to CONTRACTOR, with copies to each additional insured identified in the Supplementary Conditions, certificates of insurance (and other evidence of insurance requested by CONTRACTOR or any other additional insured) which OWNER is required to purchase and maintain in accordance with paragraph 5.6 hereof.

CONTRACTOR's Liability Insurance:

5.4. CONTRACTOR shall purchase and maintain such liability and other insurance as is appropriate for the Work being performed and furnished and as will provide protection from claims set forth below which may arise out of or result from CONTRACTOR's performance and furnishing of the Work and CONTRACTOR's other

obligations under the Contract Documents, whether it is to be performed or furnished by CONTRACTOR, any Subcontractor or Supplier, or by anyone directly or indirectly employed by any of them to perform or furnish any of the Work, or by anyone for whose acts any of them may be liable:

5.4.1. claims under workers' compensation, disability benefits and other similar employee benefit acts; such as the U.S. Longshore and Harborworkers', Maritime Employment, or Railroad Compensation Act(s), if applicable;

5.4.2. claims for damages because of bodily injury, occupational sickness or disease, or death of CONTRACTOR's employees;

5.4.3. claims for damages because of bodily injury, sickness or disease, or death of any person other than CONTRACTOR's employees;

5.4.4. claims for damages insured by customary personal injury liability coverage which are sustained: (i) by any person as a result of an offense directly or indirectly related to the employment of such person by CONTRACTOR, or (ii) by any other person for any other reason;

5.4.5. claims for damages, other than to the Work itself, because of injury to or destruction of tangible property wherever located, including loss of use resulting therefrom; and

5.4.6. claims for damages because of bodily injury or death of any person or property damage arising out of the ownership, maintenance or use of any motor vehicle.

The policies of insurance so required by this paragraph 5.4 to be purchased and maintained shall:

5.4.7. with respect to insurance required by paragraphs 5.4.3 through 5.4.6 inclusive, include as additional insureds (subject to any customary exclusion in respect of professional liability) OWNER, PROFESSIONAL, PROFESSIONAL's Consultants and any other persons or entities identified in the Insurance Coverages, all of whom shall be listed as additional insureds, and include coverage for the respective officers and employees of all such additional insureds;

5.4.8. include the specific coverages and be written for not less than the limits of liability provided in the Insurance Coverages or required by Laws or Regulations, whichever is greater;

5.4.9. include completed operations insurance;

5.4.10. include contractual liability insurance covering CONTRACTOR's indemnity obligations under paragraphs 6.12, 6.16 and 6.31 through 6.33;

5.4.11. contain a provision or endorsement that the coverage afforded will not be canceled, materially changed or renewal refused until at least thirty days prior written notice has been given to OWNER and CONTRACTOR and to each other additional insured identified in the Supplementary Conditions to whom a certificate of insurance has been issued (and the certificates of insurance furnished by the CONTRACTOR pursuant to paragraph 5.3.2 will so provide);

5.4.12. remain in effect at least until final payment and at all times thereafter when CONTRACTOR may be correcting, removing or replacing *defective* Work in accordance with paragraph 13.12; and

5.4.13. with respect to completed operations insurance, and any insurance coverage written on a claims-made basis, remain in effect for at least two years after final payment (and CONTRACTOR shall furnish OWNER and each other additional insured identified in the Supplementary Conditions to whom a certificate of insurance has been issued evidence satisfactory to OWNER and any such additional insured of continuation of such insurance at final payment and one year thereafter).

OWNER's Liability Insurance:

5.5. In addition to the insurance required to be provided by CONTRACTOR under paragraph 5.4, OWNER, at OWNER's option, may purchase and maintain at OWNER's expense OWNER's own liability insurance as will protect OWNER against claims which may arise from operations under the Contract Documents.

Property Insurance:

5.6. CONTRACTOR shall purchase and maintain property insurance upon the Work for any or all insurable portions of the Work at the site in the amount of the full replacement cost thereof (subject to such deductible amounts as may be provided in these Supplementary Conditions or required by Laws and Regulations). This insurance shall:

5.6.1. include the interests of OWNER, CONTRACTOR, SubCONTRACTORs, PROFESSIONAL, and PROFESSIONAL's Consultants and also any other persons or entities specifically identified in the Supplementary Conditions, each of whom is deemed to have an insurable interest as an insured or additional insured;

5.6.2 be written on a Builder's Risk "all-risk" or rider or floater or another policy or special causes of loss policy form that shall at least include insurance for any or all insurable portions of the Work for physical loss and damage to the Work, temporary buildings, falsework and Work in transit and shall insure against at least the following perils: fire, lightning, extended coverage, theft, vandalism and malicious mischief, earthquake, collapse, debris removal, demolition occasioned by enforcement of Laws and Regulations, water damage, and such other perils as may be specifically required by the Supplementary Conditions.

5.6.3 include expenses incurred in the repair or replacement of any insured property (including but not limited to fees and charges of PROFESSIONAL's and architects);

5.6.4 by an installation floater covering materials and equipment in transit for incorporation in the Work or stored and secured at the site or at another location that was agreed to in writing by OWNER prior to being incorporated in the Work, provided that such materials and equipment have been included in an Application for Payment as "materials stored and secured on site" recommended by PROFESSIONAL; and

5.6.5 be maintained in effect until final payment is made unless otherwise agreed to in writing by OWNER, CONTRACTOR and PROFESSIONAL with thirty days written notice to each other additional insured to whom a certificate of insurance has been issued.

The policies of insurance required to be purchased and maintained by CONTRACTOR in accordance with this paragraph 5.6 shall comply with the requirements of GC-5.8

5.7. Not in this contract.

5.8. All the policies of insurance (and the certificates or other evidence thereof) required to be purchased and maintained by OWNER will contain a provision or endorsement that the coverage afforded will not be canceled or materially changed or renewal refused until at least thirty days' prior written notice has been given to OWNER and CONTRACTOR and to each other additional insured to whom a certificate of insurance has been issued and will contain waiver provisions in accordance with paragraph 5.11.

5.9. OWNER shall not be responsible for purchasing and maintaining any property insurance to protect the interest of CONTRACTOR, Subcontractors or others in the Work to the extent of any deductible amounts that are identified in the Supplementary Conditions. The risk of loss within such identified deductible amount, will be borne by CONTRACTOR, Subcontractor or others suffering any such loss and if any of them wishes property insurance coverage within the limits of such amounts, each may purchase and maintain it at the purchaser's own expense.

5.10. If CONTRACTOR requests in writing that other special insurance be included in the property insurance policies provided under paragraphs 5.6, OWNER shall, if possible, include such insurance, and the cost thereof will be charged to CONTRACTOR by appropriate Change Order or written amendment. Prior to commencement of the Work at the site, OWNER shall in writing advise CONTRACTOR whether or not such other insurance has been procured by OWNER.

5.11. **Waiver of Rights:**

5.11.1. OWNER and CONTRACTOR intend that all policies purchased in accordance with paragraph 5.6 will protect OWNER, CONTRACTOR, Subcontractors, PROFESSIONAL, PROFESSIONAL's Consultants and all other persons or entities identified in the Supplementary Conditions to be listed as insureds or additional insureds in such policies and will provide primary coverage for all losses and damages caused by the perils covered thereby. All such policies shall contain provisions to the effect that in the event of payment of any loss or damage the insurers will have no rights of recovery against any of the insureds or additional insureds thereunder. OWNER and CONTRACTOR waive all rights against each other and their respective officers, directors, employees and agents for all losses and damages caused by, arising out of or resulting from any of the perils covered by such policies and any other property insurance applicable to the Work; and, in addition, waive all such rights against Subcontractors, PROFESSIONAL, PROFESSIONAL's Consultants and all other persons or entities identified in the Supplementary Conditions to be listed as insureds or additional insureds under such policies for losses and damages so caused. None of the above waivers shall extend to the rights that any party making such waiver may have to the proceeds of insurance held by OWNER as trustee or otherwise payable under any policy so issued.

5.11.2. In addition, OWNER waives all rights against CONTRACTOR, Subcontractors, PROFESSIONAL, PROFESSIONAL's Consultants and the officers, directors, employees and agents of any of them for:

5.11.2.1. loss due to business interruption, loss of use or other consequential loss extending beyond direct physical loss or damage to OWNER's property or the Work caused by, arising out of or resulting from fire or other peril, whether or not insured by OWNER; and

5.11.2.2. loss or damage to the completed Project or part thereof caused by, arising out of or resulting from fire or other insured peril covered by any property insurance maintained on the completed Project or part thereof by OWNER during partial utilization pursuant to paragraph 14.10, after substantial completion pursuant to paragraph 14.8 or after final payment pursuant to paragraph 14.13.

Any insurance policy maintained by OWNER covering any loss, damage or consequential loss referred to in this paragraph 5.11.2 shall contain provisions to the effect that in the event of payment of any such loss, damage or consequential loss the insurers will have no rights of recovery against any of CONTRACTOR, Subcontractors, PROFESSIONAL, PROFESSIONAL's Consultants and the officers, directors, employees and agents of any of them.

Receipt and Application of Insurance Proceeds:

5.12. Any insured loss under the policies of insurance required by paragraphs 5.6 will be adjusted with OWNER and made payable to OWNER as fiduciary for the insured, as their interests may appear, subject to the requirements of any applicable mortgage clause and of paragraph 5.13. OWNER shall deposit in a separate account any money so received, and shall distribute it in accordance with such agreement as the parties in interest may reach. If no other special agreement is reached the damaged Work shall be repaired or replaced, the moneys so received applied on account thereof and the Work and the cost thereof covered by an appropriate Change Order or Written Amendment.

5.13. OWNER as fiduciary shall have power to adjust and settle any loss with the insurers unless one of the parties in interest shall object in writing within fifteen days after the occurrence of loss to OWNER's exercise of this power. If such objection be made, OWNER as fiduciary shall make settlement with the insurers in accordance with such agreement as the parties in interest may reach. If no such agreement among the parties in interest is reached, OWNER as fiduciary shall adjust and settle the loss with the insurers and, if required in writing by any party in interest, OWNER as fiduciary shall give bond for the proper performance of such duties.

Acceptance of Bonds and Insurance; Option to Replace:

5.14. If either party (OWNER or CONTRACTOR) has any objection to the coverage afforded by or other provisions of the Bonds or insurance required to be purchased and maintained by the other party in accordance with Article 5 on the basis of non-conformance with the Contract Documents, the objecting party shall so notify the other party in writing within ten days after receipt of the certificates (or other evidence requested) required by paragraph 2.7. OWNER and CONTRACTOR shall each provide to the other such additional information in respect of insurance provided as the other may reasonably request. If either party does not purchase or maintain all of the Bonds and insurance required of such party by the Contract Documents, such party shall notify the other party in writing of such failure to purchase prior to the start of the Work, or of such failure to maintain prior to any change in the required coverage. Without prejudice to any other right or remedy, the other party may elect to obtain equivalent Bonds or insurance to protect such other party's interests at the expense of the party who was required to provide such coverage, and a Change Order shall be issued to adjust the Contract Price accordingly.

Partial Utilization——Property Insurance:

5.15. If OWNER finds it necessary to occupy or use a portion or portions of the Work prior to Substantial completion of all the Work, such use or occupancy may be accomplished in accordance with paragraph 14.10; provided that no such use or occupancy shall commence before the insurers providing the property insurance have acknowledged notice thereof and in writing effected any changes in coverage necessitated thereby. The insurers providing the property insurance shall consent by endorsement on the policy or policies, but the property insurance shall not be canceled or permitted to lapse on account of any such partial use or occupancy.

ARTICLE 6——CONTRACTOR'S RESPONSIBILITIES

Supervision and Superintendence:

6.1. CONTRACTOR shall supervise, inspect and direct the Work competently and efficiently, devoting such attention thereto and applying such skills and expertise as may be necessary to perform the Work in accordance with the Contract Documents. CONTRACTOR shall be solely responsible for the means, methods, techniques, sequences and procedures of construction, but CONTRACTOR shall not be responsible for the negligence of others in the design or specification of a specific means, method, technique, sequence or procedure of construction which is shown or indicated in and expressly required by the Contract Documents. CONTRACTOR shall be responsible to see that the completed Work complies accurately with the Contract Documents.

6.2. CONTRACTOR shall keep on the Work at all times during its progress a competent resident superintendent, who shall not be replaced without written notice to OWNER and PROFESSIONAL except under extraordinary circumstances. The superintendent will be CONTRACTOR's representative at the site and shall have authority to act on behalf of CONTRACTOR. All communications to the superintendent shall be as binding as if given to CONTRACTOR.

Labor, Materials and Equipment

6.3. CONTRACTOR shall provide competent, suitably qualified personnel to survey, lay out and construct the Work as required by the Contract Documents. CONTRACTOR shall at all times maintain good discipline and order at the site. Except as otherwise required for the safety or protection of persons or the Work or property at the site or adjacent thereto, and except as otherwise indicated in the Contract Documents, all Work at the site shall be performed during regular working hours and CONTRACTOR will not permit overtime work or the performance of the Work on Saturday, Sunday or any legal holiday without OWNER's written consent given after prior written notice to PROFESSIONAL.

6.4. Unless otherwise specified in the General Requirements, CONTRACTOR shall furnish and assume full responsibility for all materials, equipment, labor, transportation, construction equipment and machinery, tools, appliances, fuel, power, light, heat, telephone, water, sanitary facilities, temporary facilities and all other facilities and incidentals necessary for the furnishing, performance, testing, start-up and completion of the Work.

6.5 All materials and equipment shall be of good quality and new, except as otherwise provided in the Contract Documents. All warranties and guarantees specifically called for by the Specifications shall be expressly run to the benefit of OWNER. If required by PROFESSIONAL, CONTRACTOR shall furnish satisfactory evidence (including reports of required tests) as to the kind and quality of materials and equipment. All materials and equipment shall be applied, installed, connected, erected, used, cleaned and conditioned in accordance with instructions of the applicable supplier, except as otherwise provided in the Contract Documents.

Progress Schedule:

6.6. CONTRACTOR shall adhere to the progress schedule established in accordance with paragraph 2.9 as it may be adjusted from time to time as provided below:

6.6.1. CONTRACTOR shall submit to PROFESSIONAL for acceptance (to the extent indicated in paragraph 2.9) proposed adjustments in the progress schedule that will not change the Contract Times (or Milestones). Such adjustments will conform generally to the progress schedule then in effect and additionally will comply with any provisions of the General Requirements applicable thereto.

6.6.2. Proposed adjustments in the progress schedule that will change the Contract Times (or Milestones) shall be submitted in accordance with the requirements of paragraph 12.1. Such adjustments may only be made by a Change Order or Written Amendment in accordance with Article 12.

6.7. **Substitutes and "Or-Equal" Items:**

6.7.1. Whenever an item of material or equipment is specified or described in the Contract Documents by using the name of a proprietary item or the name of a particular Supplier, the specification or description is intended to establish the type, function and quality required. Unless the specification or description contains or is followed by words reading that no like, equivalent or "or-equal" item or no substitution is permitted, other items of material or equipment or material or equipment of other Suppliers may be accepted by PROFESSIONAL under the following circumstances:

6.7.1.1. "Or-Equal": If in PROFESSIONAL's sole discretion an item of material or equipment proposed by CONTRACTOR is functionally

equal to that named and sufficiently similar so that no change in related Work will be required, it may be considered by PROFESSIONAL as an "or-equal" item, in which case review and approval of the proposed item may, in PROFESSIONAL's sole discretion, be accomplished without compliance with some or all of the requirements for acceptance of proposed substitute items.

6.7.1.2. *Substitute Items:* If in PROFESSIONAL's sole discretion an item of material or equipment proposed by CONTRACTOR does not qualify as an "or-equal" item under subparagraph 6.7.1.1, it will be considered a proposed substitute item. CONTRACTOR shall submit sufficient information as provided below to allow PROFESSIONAL to determine that the item of material or equipment proposed is essentially equivalent to that named and an acceptable substitute therefor. The procedure for review by the PROFESSIONAL will include the following as supplemented in the General Requirements and as PROFESSIONAL may decide is appropriate under the circumstances. Request for review of proposed substitute items of material or equipment will not be accepted by PROFESSIONAL from anyone other than CONTRACTOR. If CONTRACTOR wishes to furnish or use a substitute item of material or equipment, CONTRACTOR shall first make written application to PROFESSIONAL for acceptance thereof, certifying that the proposed substitute will perform adequately the functions and achieve the results called for by the general design, be similar in substance to that specified and be suited to the same use as that specified. The application will state the extent, if any, to which the evaluation and acceptance of the proposed substitute will prejudice CONTRACTOR's achievement of Substantial Completion on time, whether or not acceptance of the substitute for use in the Work will require a change in any of the Contract Documents (or in the provisions of any other direct contract with OWNER for work on the Project) to adapt the design to the proposed substitute and whether or not incorporation or use of the substitute in connection with the Work is subject to payment of any license fee or royalty. All variations of the proposed substitute from that specified will be identified in the application and available maintenance, repair and replacement service will be indicated. The application will also contain an itemized estimate of all cost or credits that will result directly or indirectly from acceptance of such substitute, including costs of redesign and claims of other contractors affected by the resulting change, all of which will be considered by PROFESSIONAL in evaluating the proposed substitute. PROFESSIONAL may require CONTRACTOR to furnish additional data about the proposed substitute.

6.7.1.3. *CONTRACTOR's Expense:* All data to be provided by CONTRACTOR in support of any proposed "or-equal" or substitute item will be at CONTRACTOR's expense.

6.7.2. *Substitute Construction Methods or Procedures:* If a specific means, method, technique, sequence or procedure of construction is shown or indicated in and expressly required by the Contract Documents, CONTRACTOR may furnish or utilize a substitute means, method, technique, sequence or procedure of construction acceptable to PROFESSIONAL. CONTRACTOR shall submit sufficient information to allow PROFESSIONAL, in PROFESSIONAL's sole discretion, to determine that the substitute proposed is equivalent to that expressly called for by the Contract Documents. The procedure for review by PROFESSIONAL will be similar to that provided in subparagraph 6.7.1.2.

6.7.3. *Professional's Evaluation:* PROFESSIONAL will be allowed a reasonable time within which to evaluate each proposal or submittal made pursuant to paragraphs 6.7.1.2 and 6.7.2, PROFESSIONAL will be the sole judge of acceptability. No "or-equal" or substitute will be ordered, installed or utilized without PROFESSIONAL's prior written acceptance which will be evidenced by either a Change Order or an approved Shop Drawing. OWNER may require CONTRACTOR to furnish at CONTRACTOR's expense a special performance guarantee or other surety with respect to any "or-equal" or substitute. PROFESSIONAL will record time required by PROFESSIONAL and PROFESSIONAL's Consultants in evaluating substitutes proposed or submitted by CONTRACTOR pursuant to paragraphs 6.7.1.2. and 6.7.2 and in making changes in the Contract Documents (or in the provisions of any other direct contract with OWNER for work on the Project) occasioned thereby. Whether or not PROFESSIONAL accepts a substitute item so proposed or submitted by CONTRACTOR, CONTRACTOR shall reimburse OWNER for the charges of PROFESSIONAL and PROFESSIONAL's Consultants for evaluating each such proposed substitute item.

Concerning Subcontractors, Suppliers and Others:

6.8. CONTRACTOR shall not employ and Subcontractor, Supplier or other person or organization, whether initially or as a substitute, against whom OWNER or PROFESSIONAL may have reasonable objection. CONTRACTOR shall not be required to employ any Subcontractor, Supplier or other person or organization to furnish or perform any of the Work against whom CONTRACTOR has reasonable objection.

6.8.1. CONTRACTOR shall be fully responsible to OWNER and PROFESSIONAL for all acts and omissions of the Subcontractors, Suppliers and other persons and organizations performing or furnishing any of the Work under a direct or indirect contract with CONTRACTOR just as CONTRACTOR is responsible for CONTRACTOR's own acts and omissions. Nothing in the Contract Documents shall create for the benefit of any such Subcontractor, Supplier or other person or organization any contractual relationship between OWNER or PROFESSIONAL and any such Subcontractor, Supplier or other person or organization, nor shall it create any obligation on the part of OWNER or PROFESSIONAL to pay or to see to the payment of any moneys due any such Subcontractor, Supplier or other person or organization except as may otherwise be required by Laws and Regulations.

6.8.2. CONTRACTOR shall be solely responsible for scheduling and coordinating the Work of Subcontractors, Suppliers and other persons and organizations performing or furnishing any of the Work under a direct or indirect contract with CONTRACTOR. CONTRACTOR shall require all Subcontractors, Suppliers and such other persons and organizations performing or furnishing any of the Work to communicate with the PROFESSIONAL through CONTRACTOR.

6.9. The divisions and sections of the Specifications and the identifications of any Drawings shall not control CONTRACTOR in dividing the Work among Subcontractors or Suppliers or delineating the Work to be performed by any specific trade.

6.10. All Work performed for CONTRACTOR by a Subcontractor or Supplier will be pursuant to an appropriate agreement between CONTRACTOR and the Subcontractor or Supplier which specifically binds the Subcontractor or Supplier to the applicable terms and conditions of the Contract Documents for the benefit of OWNER and PROFESSIONAL. Whenever any such agreement is with a Subcontractor or Supplier who is listed as an additional insured on the property insurance provided in paragraph 5.6, the agreement between the CONTRACTOR and Subcontractor or Supplier will contain provisions whereby the Subcontractor or Supplier waives all rights against OWNER, CONTRACTOR, PROFESSIONAL, PROFESSIONAL's Consultants and all other additional insureds for all losses and damages caused by, arising out of or resulting from any of the perils covered by such policies and any other property insurance applicable to the Work. If the insurers on any such policies require separate waiver forms to be signed by any Subcontractor or Supplier, CONTRACTOR will obtain the same.

6.11 Not in this Contract

Patent Fees and Royalties:

6.12. CONTRACTOR shall pay all license fees and royalties and assume all costs incident to the use in the performance of the Work or the incorporation in the Work of any invention, design, process, product or device which is the subject of patent rights or copyrights held by others. If a particular invention, design, process, product or device is specified in the Contract Documents for use in the performance of the Work and if to the actual knowledge of OWNER or PROFESSIONAL its use is subject to patent rights or copyrights calling for the payment of any license fee or royalty to others, the existence of such rights shall be disclosed by OWNER in the Contract Documents. To the fullest extent permitted by Laws and Regulations, CONTRACTOR shall indemnify and hold harmless OWNER, PROFESSIONAL, PROFESSIONAL's Consultants and the officers, directors, employees, agents and other consultants of each and any of them from and against all claims, costs, losses and damages arising out of or resulting from any infringement of patent rights or copyrights incident to the use in the performance of the Work or resulting from the incorporation in the Work of any invention, design, process, product or device not specified in the Contract Document.

Permits:

6.13. Unless otherwise provided in the Supplementary Conditions, CONTRACTOR shall obtain and pay for all construction permits and licenses. OWNER shall assist CONTRACTOR, when necessary, in obtaining such permits and licenses. CONTRACTOR shall pay all governmental charges and inspection fees necessary for the prosecution of the Work, which are applicable at the time of opening of Bids, or, if there are no Bids, on the Effective Date of the Agreement. CONTRACTOR shall pay all charges of utility owners for connections to the Work, and OWNER shall pay all charges of such utility owners for capital costs related thereto such as plant investment fees.

6.14 ***Laws and Regulations:***

6.14.1. CONTRACTOR shall give all notices and comply with all Laws and Regulations applicable to furnishing and performance of the Work. Except where otherwise expressly required by applicable Laws and Regulations, neither OWNER nor PROFESSIONAL shall be responsible for monitoring CONTRACTOR's compliance with any Laws or Regulations.

6.14.2. If CONTRACTOR performs any Work knowing or having reason to know that it is contrary to Laws or Regulations, CONTRACTOR shall bear all claims, costs, losses and damages caused by, arising out of or resulting therefrom; however, it shall not be CONTRACTOR's primary responsibility to make certain that the Specifications and Drawings are in accordance with Laws and Regulations, but this shall not relieve CONTRACTOR of CONTRACTOR's obligations under paragraph 3.3.2.

Taxes:

6.15. CONTRACTOR shall pay all sales, consumer, use and other similar taxes required to be paid by CONTRACTOR in accordance with the Laws and Regulations of the place of the Project which are applicable during the performance of the Work.

Use of Premises:

6.16. CONTRACTOR shall confine construction equipment, the storage of materials and equipment and the operations of workers to the site and land and areas identified in and permitted by the Contract Documents and other land and areas permitted by Laws and Regulations, rights-of-way, permits and easements, and shall not unreasonably encumber the premises with construction equipment or other materials or equipment. The CONTRACTOR shall assume full responsibility for the safe-guarding and protection of all buildings, poles, conduits, manholes, catchbasins, valve boxes, trees, water mains and services, storm and sanitary sewers, gas mains and services, or other structures which may occur near his work or which in any way may be affected by any of his work under this contract except as otherwise specifically stated in the contract documents. CONTRACTOR shall assume full responsibility for any damage to any such land or area, or to the owner or occupant thereof or of any adjacent land or areas, resulting from the performance of the Work. Should any claim be made by any such owner or occupant because of the performance of the Work, CONTRACTOR shall promptly settle with such other party by negotiation or otherwise resolve the claim by arbitration or other dispute resolution proceeding or at law. CONTRACTOR shall, to the fullest extend permitted by Laws and Regulations, indemnify and hold harmless OWNER, PROFESSIONAL, PROFESSIONAL's Consultant and anyone directly or indirectly employed by any of them from and against all claims, costs, losses and damages arising out of or resulting from any claim or action, legal or equitable, brought by any such owner or occupant against OWNER, PROFESSIONAL or any other party indemnified hereunder to the extent caused by or based upon CONTRACTOR's performance of the Work.

6.17. During the progress of the Work, CONTRACTOR shall keep the premises free from accumulations of waste materials, rubbish and other debris resulting from the Work. At the completion of the Work CONTRACTOR shall remove all waste materials, rubbish and debris from and about the premises as well as all tools, appliances, construction equipment and machinery and surplus materials. CONTRACTOR shall leave the site clean and ready for occupancy by OWNER at Substantial Completion of the Work. CONTRACTOR shall restore to original condition all property not designated for alteration by the Contract Documents.

6.18. CONTRACTOR shall not load nor permit any part of any structure to be loaded in any manner that will endanger the structure, nor shall CONTRACTOR subject any part of the Work or adjacent property to stresses or pressures that will endanger it.

Record Documents:

6.19. CONTRACTOR shall maintain in a safe place at the site one record copy of all Drawings, Specifications, Addenda, Written Amendments, Change Orders, Work Change Directives, Field Orders and written interpretations and clarifications (issued pursuant to paragraph 9.4) in good order and annotated to show all changes made during construction. These record documents together with all approved Samples and a counterpart of all approved Shop Drawings will be available to PROFESSIONAL for reference. Upon completion of the Work, these record documents, Samples and Shop Drawings will be delivered to PROFESSIONAL for OWNER.

Safety and Protection:

6.20. CONTRACTOR shall be responsible for initiating, maintaining and supervising all safety precautions and programs in connection with the Work. CONTRACTOR shall take all necessary precautions for the safety of, and shall provide the necessary protection to prevent damage, injury or loss to:

6.20.1. all persons on the Work site or who may be affected by the Work;

6.20.2. all the Work and materials and equipment to be incorporated therein, whether in storage on or off the site; and

6.20.3. other property at the site or adjacent thereto, including trees, shrubs, lawns, walks, pavements, roadways, structures, utilities and Underground Facilities not designated for removal, relocation or replacement in the course of construction.

CONTRACTOR shall comply with all applicable Laws and Regulations of any public body having jurisdiction for safety of persons or property or to protect them from damage, injury or loss; and shall erect and maintain all necessary safeguards for such safety and protection. When working in a roadway or public right-of-way, the CONTRACTOR shall, at all times, so conduct his work as to ensure the least possible obstruction to traffic. The safety and convenience of the general public and the residents along the roadway and the protection of persons and property shall be provided by the CONTRACTOR at all times in accordance with the authority which has jurisdiction over the roadway. To that end, the CONTRACTOR shall erect and shall maintain during the continuance of the work, such barricades, lights, signs and other protective devices which comply with the laws of the State of Michigan and the Michigan Manual for Uniform Traffic Control Devices. The CONTRACTOR shall also furnish such watchmen as will effectually prevent any accident in consequence of his work and he shall be liable for all accidents and damages occasioned in any way by his acts of neglect, or by the acts of neglect of his subCONTRACTORs, agents or workers. CONTRACTOR shall notify owners of adjacent property and of Underground Facilities and utility owners when prosecution of the Work may affect them and shall cooperate with them in the protection, removal, relocation and replacement of their property. All damage, injury or loss to any property referred to in paragraph 6.20.2 or 6.20.3 caused, directly or indirectly, in whole or in part, by CONTRACTOR, any Subcontractor, Supplier or any other person or organization directly or indirectly employed by any of them to perform or furnish any of the Work or anyone for whose acts any of them may be liable, shall be remedied by CONTRACTOR (except damage or loss attributable to the fault of Drawings or Specifications or to the acts or omissions of OWNER or PROFESSIONAL or PROFESSIONAL's Consultant or anyone employed by any of them or anyone for whose acts any of them may be liable, and not attributable, directly or indirectly, in whole or in part, to the fault or negligence of CONTRACTOR or any Subcontractor, Supplier or other person or organization directly or indirectly employed by any of them). CONTRACTOR's duties and responsibilities for safety and for protection of the work shall continue until such time as all the Work is completed and PROFESSIONAL has issued a notice to OWNER and CONTRACTOR in accordance with paragraph 14.13 that the Work is acceptable (except as otherwise expressly provided in connection with Substantial Completion).

Safety Representative:

6.21. CONTRACTOR shall designate a qualified and experienced safety representative at the site whose duties and responsibilities shall be the prevention of accidents and the maintaining and supervising of safety precautions and programs.

Hazard Communication Programs:

6.22. CONTRACTOR shall be responsible for coordinating any exchange of material safety data sheets or other hazard communication information required to be made available to or exchanged between or among employers at the site in accordance with Laws or Regulations.

Emergencies:

6.23. In emergencies affecting the safety or protection of persons or the Work or property at the site or adjacent thereto, CONTRACTOR, without special instruction or authorization from OWNER or PROFESSIONAL, is obligated to act to prevent threatened damage, injury or loss. CONTRACTOR shall give PROFESSIONAL prompt written notice if CONTRACTOR believes that any significant changes in the Work or variations from the Contract Documents have been caused thereby. If PROFESSIONAL determines that a change in the Contract Documents is required because of the action taken by CONTRACTOR in response to such an emergency, a Work Change Directive or Change Order will be issued to document the consequences of such action.

6.24. **Shop Drawings and Samples:**

6.24.1. CONTRACTOR shall submit Shop Drawings to PROFESSIONAL for review and approval in accordance with the accepted schedule of Shop Drawings and Sample submittals (see paragraph 2.9). All submittals will be identified as PROFESSIONAL may require and in the number of copies specified in the General Requirements. The data shown on the Shop Drawings will be complete with respect to quantities,

dimensions, specified performance and design criteria, materials and similar data to show PROFESSIONAL the materials and equipment CONTRACTOR proposes to provide and to enable PROFESSIONAL to review the information for the limited purposes required by paragraph 6.26.

6.24.2 CONTRACTOR shall also submit Samples to PROFESSIONAL for review and approval in accordance with said accepted schedule of Shop Drawings and Sample submittals. Each Sample will be identified clearly as to material, Supplier, pertinent data such as catalog numbers and the use for which intended and otherwise as PROFESSIONAL may require to enable PROFESSIONAL to review the submittal for the limited purposes required by paragraph 6.26. The numbers of each Sample to be submitted will be as specified in the Specifications.

6.25. ***Submittal Procedures:***

6.25.1. Before submitting each Shop Drawing or Sample, CONTRACTOR shall have determined and verified:

6.25.1.1. all field measurements, quantities, dimensions, specified performance criteria, installation requirements, materials, catalog numbers and similar information with respect thereto,

6.25.1.2. all materials with respect to intended use, fabrication, shipping, handling, storage, assembly and installation pertaining to the performance of the Work, and

6.25.1.3. all information relative to CONTRACTOR's sole responsibilities in respect of means, methods, techniques, sequences and procedures of construction and safety precautions and programs incident thereto.

CONTRACTOR shall also have reviewed and coordinated each Shop Drawing or Sample with other Shop Drawings and Samples and with the requirements of the Work and the Contract Documents.

6.25.2. Each submittal will bear a stamp or specific written indication that CONTRACTOR has satisfied CONTRACTOR's obligations under the Contract Documents with respect to CONTRACTOR's review and approval of that submittal.

6.25.3. At the time of each submission, CONTRACTOR shall give PROFESSIONAL specific written notice of such variations, if any, that the Shop Drawing or Sample submitted may have from the requirements of the Contract Documents, such notice to be in a written communication separate from the submittal; and, in addition, shall cause a specific notation to be made on each Shop Drawing and Sample submitted to PROFESSIONAL for review and approval of each such variation.

6.26. PROFESSIONAL will review and approve Shop Drawings and Samples in accordance with the schedule of Shop Drawings and Sample submittals accepted by PROFESSIONAL as required by paragraph 2.9. PROFESSIONAL's review and approval will be only to determine if the items covered by the submittals will, after installation or incorporation in the Work, conform to the information given in the Contract Documents and be compatible with the design concept of the completed Project as a functioning whole as indicated by the Contract Documents. PROFESSIONAL's review and approval will not extend to means, methods, techniques, sequences or procedures of construction (except where a particular means, method, technique, sequence or procedure of construction is specifically and expressly called for by the Contract Documents) or to safety precautions or programs incident thereto. The review and approval of a separate item as such will not indicate approval of the assembly in which the item functions. CONTRACTOR shall make corrections required by PROFESSIONAL, and shall return the required number of corrected copies of Shop Drawings and submit as required new samples for review and approval.

6.27 PROFESSIONAL's review and approval of Shop Drawings or Samples shall not relieve CONTRACTOR from responsibility for any variation from the requirements of the Contract Documents unless CONTRACTOR has in writing called PROFESSIONAL's attention to each such variation at the time of submission as required by paragraph 6.25.3 and PROFESSIONAL has given written approval of each such variation by specific written notation thereof incorporated in or accompanying the Shop Drawing or Sample approval; nor will any approval by PROFESSIONAL relieve CONTRACTOR from responsibility for complying with the requirements of paragraph 6.25.1.

6.28. Where a Shop Drawing or Sample is required by the Contract Documents or the schedule of Shop Drawings and Sample submissions accepted by PROFESSIONAL as required by paragraph 2.9, any related Work performed prior to PROFESSIONAL'S review and approval of the pertinent submittal will be at the sole expense and responsibility of CONTRACTOR.

Continuing the Work:

6.29. CONTRACTOR shall carry on the Work and adhere to the progress schedule during all disputes or disagreements with OWNER. No Work shall be delayed or postponed pending resolution of any disputes or disagreements, except as permitted by paragraph 15.5 or as OWNER and CONTRACTOR may otherwise agree in writing.

6.30. ***CONTRACTOR's General Warranty and Guarantee:***

6.30.1. CONTRACTOR warrants and guarantees to OWNER, PROFESSIONAL and PROFESSIONAL's Consultants that all work will be in accordance with Contract Documents and will not be *defective*. CONTRACTOR's warranty and guarantee hereunder excludes defects or damage caused by:

6.30.1.1. abuse, modification or improper maintenance or operation by persons other than CONTRACTOR, Subcontractors or Suppliers; or

6.30.1.2. normal wear and tear under normal usage.

6.30.2. CONTRACTOR's obligation to perform and complete the Work in accordance with the Contract Documents shall be absolute. None of the following will constitute an acceptance of Work that is not in accordance with the Contract Documents or a release of CONTRACTOR's obligation to perform the Work in accordance with the Contract Documents:

6.30.2.1. observations by PROFESSIONAL;

6.30.2.2. recommendation of any progress or final payment by PROFESSIONAL;

6.30.2.3. the issuance of a certificate of Substantial Completion or any payment by OWNER to CONTRACTOR under the Contract Documents;

6.30.2.4. use or occupancy of the Work or any part thereof by OWNER;

6.30.2.5. any acceptance by OWNER or any failure to do so;

6.30.2.6. any review and approval of a Shop Drawing or Sample submittal or the issuance of a notice of acceptability by PROFESSIONAL pursuant to paragraph 14.13;

6.30.2.7. any inspection, test or approval by others; or

6.30.2.8. any correction of *defective* Work by OWNER.

Indemnification:

6.31. To the fullest extent permitted by Laws and Regulations, CONTRACTOR shall indemnify and hold harmless OWNER, PROFESSIONAL, PROFESSIONAL's consultants and the officers, directors, employees, agents and other consultants of each and any of them from and against all claims, costs, losses and damages (including but not limited to all fees and charges of engineers, architects, attorneys and other professionals and all court or arbitration or other dispute resolution costs) caused by, arising out of or resulting from the performance of the Work, provided that any such claim, cost, loss or damage: (i) is attributable to bodily injury, sickness, disease or death, or to injury to or destruction of tangible property (other than the Work itself), including the loss of use resulting therefrom, and (ii) is caused in whole or in part by any negligent act or omission of CONTRACTOR, any Subcontractor, any Supplier, any person or organization directly or indirectly employed by any of them to perform or furnish any of the Work or anyone for whose acts any of them may be liable, regardless of whether or not caused in part by any negligence or omission of a person or entity indemnified hereunder or whether liability is imposed upon such indemnified party by Laws and Regulations regardless of the negligence of any such person or entity.

6.32. In any and all claims against OWNER or PROFESSIONAL or any of their respective consultants, agents, officers, directors or employees by any employee (or the survivor or personal representative of such employee) of CONTRACTOR, any Subcontractor, any Supplier, any person or organization directly or indirectly employed by any of them to perform or furnish any of the Work, or anyone for whose acts any of them may be liable, the indemnification obligation under paragraph 6.31 shall not be limited in any way by any limitation on the amount or type of damages, compensation or benefits payable by or for CONTRACTOR or any such Subcontractor, Supplier or other person or organization under workers' compensation acts, disability benefit acts or other employee benefit acts.

6.33. The indemnification obligations of CONTRACTOR under paragraph 6.31 shall not extend to the liability of PROFESSIONAL and PROFESSIONAL's Consultants, officers, directors,

employees or agents caused by the professional negligence, errors or omissions of any of them.

Survival of Obligations:

6.34. All representations, indemnifications, warranties and guarantees made in, required by or given in accordance with the Contract Documents, as well as all continuing obligations indicated in the Contract Documents, will survive final payment, completion and acceptance of the Work and termination or completion of the Agreement.

ARTICLE 7——OTHER WORK

Related Work at Site:

7.1. OWNER may perform other work related to the Project at the site by OWNER's own forces, or let other direct contracts therefor which shall contain General Conditions similar to these, or have other work performed by utility owners. If the fact that such other work is to be performed was not noted in the Contract Documents, then: (i) written notice thereof will be given to CONTRACTOR prior to starting any such other work, and (ii) CONTRACTOR may make a claim therefor as provided in Articles 11 and 12 if CONTRACTOR believes that such performance will involve additional expense to CONTRACTOR or requires additional time and the parties are unable to agree as to the amount or extent thereof.

7.2. CONTRACTOR shall afford each other contractor who is a party to such a direct contract and each utility owner (and OWNER, if OWNER is performing the additional work with OWNER's employees) proper and safe access to the site and a reasonable opportunity for the introduction and storage of materials and equipment and the execution of such other work and shall properly connect and coordinate the Work with theirs. Unless otherwise provided in the Contract Documents. CONTRACTOR shall do all cutting, fitting and patching of the Work that may be required to make its several parts come together properly and integrate with such other work. CONTRACTOR shall not endanger any work of others by cutting, excavating or otherwise altering their work and will only cut or alter their work with the written consent of PROFESSIONAL and the others whose work will be affected. The duties and responsibilities of CONTRACTOR under this paragraph are for the benefit of such utility owners and other contractors to the extent that there are comparable provisions for the benefit of CONTRACTOR in said direct contracts between OWNER and such utility owners and other contractors.

7.3. If the proper execution or results of any part of CONTRACTOR's Work depends upon work performed by others under this Article 7, CONTRACTOR shall inspect such other work and promptly report to PROFESSIONAL in writing any delays, defects or deficiencies in such other work that render it unavailable or unsuitable for the proper execution and results of CONTRACTOR's Work. CONTRACTOR's failure so to report will constitute an acceptance of such other work as fit and proper for integration with CONTRACTOR's Work except for latent or nonapparent defects and deficiencies in such other work.

Coordination:

7.4. If OWNER contracts with others for the performance of other work on the Project at the site, the following will be set forth in Supplementary Conditions:

7.4.1. the person, firm or corporation who will have authority and responsibility for coordination of the activities among the various prime contractors will be identified;

7.4.2. the specific matters to be covered by such authority and responsibility will be itemized; and

7.4.3. the extent of such authority and responsibilities will be provided.

Unless otherwise provided in the Supplementary Conditions, OWNER shall have sole authority and responsibility in respect of such coordination.

ARTICLE 8——OWNER'S RESPONSIBILITIES

8.1. Except as otherwise provided in these General Conditions, OWNER shall issue all communications to CONTRACTOR through PROFESSIONAL.

8.2. In case of termination of the employment of PROFESSIONAL, OWNER shall appoint an engineer against whom CONTRACTOR makes no reasonable objection, whose status under the Contract Documents shall be that of the former PROFESSIONAL.

8.3. OWNER shall furnish the data required of OWNER under the Contract Documents promptly and shall make payments to CONTRACTOR promptly when they are due as provided in paragraphs 14.4 and 14.13.

8.4. OWNER's duties in respect of providing lands and easements and providing engineering surveys to establish reference points are set forth in paragraphs 4.1 and 4.4. Paragraph 4.2 refers to OWNER's identifying and making available to CONTRACTOR copies of reports of explorations and tests of subsurface conditions at the site and drawings of physical conditions in existing structures at or contiguous to the site that have been utilized by PROFESSIONAL in preparing the Contract Documents.

8.5. OWNER's responsibilities in respect of purchasing and maintaining liability and property insurance are set forth in paragraphs 5.5 through 5.10.

8.6. OWNER is obligated to execute Change Orders as indicated in paragraph 10.4.

8.7. OWNER's responsibility in respect of certain inspections, tests and approvals is set forth in paragraph 13.4.

8.8. In connection with OWNER's right to stop Work or suspend Work, see paragraphs 13.10 and 15.1. Paragraph 15.2 deals with OWNER's rights to terminate services of CONTRACTOR under certain circumstances.

8.9. The OWNER shall not supervise, direct or have control or authority over, nor be responsible for, CONTRACTOR's means, methods, techniques, sequences or procedures of construction or the safety precautions and programs incident thereto, or for any failure of CONTRACTOR to comply with Laws and Regulations applicable to the furnishing or performance of the Work. OWNER will not be responsible for CONTRACTOR's failure to perform or furnish the Work in accordance with the Contract Documents.

8.10. OWNER's responsibility in respect of undisclosed Asbestos, PCB's, Petroleum, Hazardous Waste or Radioactive Materials uncovered or revealed at the site is set forth in paragraph 4.5.

8.11. If and to the extent OWNER has agreed to furnish CONTRACTOR reasonable evidence that financial arrangements have been made to satisfy OWNER's obligations under the Contract Documents, OWNER's responsibility in respect thereof will be as set forth in the Supplementary Conditions.

ARTICLE 9——PROFESSIONAL'S STATUS DURING CONSTRUCTION

OWNER'S Representative:

9.1. PROFESSIONAL will be OWNER's representative during the construction period. The duties and responsibilities and the limitations of authority of PROFESSIONAL as OWNER's representative during construction are set forth in the Contract Documents and shall not be extended without written consent of OWNER and PROFESSIONAL.

Visits to Site:

9.2. PROFESSIONAL will make visits to the site at intervals appropriate to the various stages of construction as PROFESSIONAL deems necessary in order to observe as an experienced and qualified design professional the progress that has been made and the quality of the various aspects of CONTRACTOR's executed Work. Based on information obtained during such visits and observations, PROFESSIONAL will endeavor for the benefit of OWNER to determine, in general, if the Work is proceeding in accordance with the Contract Documents. PROFESSIONAL will not be required to make exhaustive or continuous on-site inspections to check the quality or quantity of the Work. PROFESSIONAL's efforts will be directed toward providing for OWNER a greater degree of confidence that the completed Work will conform generally to the Contract Documents. On the basis of such visits and on-site observations, PROFESSIONAL will keep OWNER informed of the progress of the Work and will endeavor to guard OWNER against *defective* Work. PROFESSIONAL's visits and on-site observations are subject to all the limitations on PROFESSIONALS's authority and responsibility set forth in paragraph 9.13, and particularly, but without limitation, during or as a result of PROFESSIONAL's on-site visits or observations of CONTRACTOR's Work PROFESSIONAL will not supervise, direct, control or have authority over or be responsible for CONTRACTOR's means, methods, techniques, sequences or procedures of construction, or the safety precautions and programs incident thereto, or for any failure of CONTRACTOR to comply with Laws and Regulations applicable to the furnishing or performance of the Work.

Project Representative:

9.3. If OWNER and PROFESSIONAL agree, PROFESSIONAL will furnish a Resident Project Representative to assist PROFESSIONAL in providing more continuous observation of the Work. The

responsibilities and authority and limitations thereon of any such Resident Project Representative and assistants will be as provided in paragraph 9.13 and in the Supplementary Conditions. If OWNER designates another representative or agent to represent OWNER at the site who is not PROFESSIONAL's Consultant, agent or employee, the responsibilities and authority and limitations thereon of such other person will be as provided in the Supplementary Conditions.

Clarifications and Interpretations:

9.4. PROFESSIONAL will issue with reasonable promptness such written clarifications or interpretations of the requirements of the Contract Documents (in the form of Drawings or otherwise) as PROFESSIONAL may determine necessary, which shall be consistent with the intent of and reasonably inferable from Contract Documents. Such written clarifications and interpretations will be binding on OWNER and CONTRACTOR. If OWNER or CONTRACTOR believe that a written clarification or interpretation justifies an adjustment in the Contract Price or the Contract Times and the parties are unable to agree to the amount or extent thereof, if any, OWNER or CONTRACTOR may make a written claim therefor as provided in Article 11 or Article 12.

Authorized Variations in Work:

9.5. PROFESSIONAL may authorize minor variations in the Work from the requirements of the Contract Documents which do not involve an adjustment in the Contract Price or the Contract Times and are compatible with the design concept of the completed Project as a functioning whole as indicated by the Contract Documents. These may be accomplished by a Field Order and will be binding on OWNER and also on CONTRACTOR who shall perform the Work involved promptly. If OWNER or CONTRACTOR believes that a Field Order justifies an adjustment in the Contract Price or the Contract Times and the parties are unable to agree as to the amount or extent thereof, OWNER or CONTRACTOR may make a written claim therefor as provided in Article 11 or 12.

Rejecting Defective Work:

9.6. PROFESSIONAL will have authority to disapprove or reject Work which PROFESSIONAL believes to be *defective,* or that PROFESSIONAL believes will not produce a completed Project that conforms to the Contract Documents or that will prejudice the integrity of the design concept of the completed Project as a functioning whole as indicated by the Contract Documents. PROFESSIONAL will also have authority to require special inspection or testing of the Work as provided in paragraph 13.9, whether or not the Work is fabricated, installed or completed.

9.6.1. OWNER will have the authority to reduce the contract's final payment by an amount equal to but not greater than increased indentified associated costs incurred by the OWNER due to rejection and correction of defective work above and beyond reasonable budgeted efforts.

Shop Drawings, Change Orders and Payments:

9.7. In connection with PROFESSIONAL's authority as to Shop Drawings and Samples, see paragraphs 6.24 through 6.28 inclusive.

9.8. In connection with PROFESSIONAL's authority as to Change Orders, see Articles 10, 11, and 12.

9.9. In connection with PROFESSIONAL's authority as to Applications for Payment, see Article 14.

Determinations for Unit Prices:

9.10. PROFESSIONAL will determine the actual quantities and classifications of Unit Price Work performed by CONTRACTOR. PROFESSIONAL will review with CONTRACTOR the PROFESSIONAL's preliminary determinations on such matters before rendering a written decision thereon (by recommendation of an Application for Payment or otherwise). PROFESSIONAL's written decision thereon will be final and binding upon OWNER and CONTRACTOR, unless, within ten days after the date of any such decision, either OWNER or CONTRACTOR delivers to the other and to PROFESSIONAL written notice of intention to appeal from PROFESSIONAL's decision and; (i) an appeal from PROFESSIONAL'S decision is taken within the time limits and in accordance with the procedures set forth in Article 16, Dispute Resolution or (ii) if no such Alternate Dispute Resolution Agreement has been entered into, a formal proceeding is instituted by the appealing party in a forum of competent jurisdiction to exercise such rights or remedies as the appealing party may have with respect to PROFESSIONAL's decision, unless otherwise agreed in writing by OWNER and CONTRACTOR. Such appeal will not be subject to the procedures of paragraph 9.11.

Decisions on Disputes:

9.11. PROFESSIONAL will be the initial interpreter of the requirements of the Contract Documents and judge of the acceptability of the Work thereunder. Claims, disputes and other matters relating to the acceptability of

the Work or the interpretation of the requirements of the Contract Documents pertaining to the performance and furnishing of the Work and Claims under Articles 11 and 12 in respect of changes in the Contract Price or Contract Times will be referred initially to PROFESSIONAL in writing with a request for a formal decision in accordance with this paragraph. Written notice of each such claim, dispute or other matter will be delivered by the claimant to PROFESSIONAL and the other party to the Agreement promptly (but in no event later than thirty days) after the start of the occurrence or event giving rise thereto, and written supporting data will be submitted to PROFESSIONAL and the other party within sixty days after the start of such occurrence or event unless PROFESSIONAL allows an additional period of time for the submission of additional or more accurate data in support of such claim, dispute or other matter. The opposing party shall submit any response to PROFESSIONAL and the claimant within thirty days after receipt of the claimant's last submittal (unless PROFESSIONAL allows additional time). PROFESSIONAL will render a formal decision in writing within thirty days after receipt of the opposing party's submittal, if any, in accordance with this paragraph. PROFESSIONAL's written decision on such claim, dispute or other matter will be final and binding upon OWNER and CONTRACTOR unless (i) an appeal from PROFESSIONAL's decision is taken within the time limits and in accordance with the procedures set forth in Article 16, Dispute Resolution, or (ii) if no such Alternate Dispute Resolution Agreement has been entered into, a written notice of intention to appeal from PROFESSIONAL's written decision is delivered by OWNER or CONTRACTOR to the other and to PROFESSIONAL within thirty days after the date of such decision and a formal proceeding is instituted by the appealing party in a forum of competent jurisdiction to exercise such rights
or remedies as the appealing party may have with respect to such claim, dispute or other matter in accordance with applicable Laws, and Regulations within sixty days of the date of such decision, unless otherwise agreed in writing by OWNER and CONTRACTOR.

9.12. When functioning as interpreter and judge under paragraphs 9.10 and 9.11, PROFESSIONAL will not show partiality to OWNER or CONTRACTOR and will not be liable in connection with any interpretation or decision rendered in good faith in such capacity. The rendering of a decision by PROFESSIONAL pursuant to paragraphs 9.10 or 9.11 with respect to any such claim, dispute or other matter (except any which have been waived by the making or acceptance of final payment as provided in paragraph 14.16) will be a condition precedent to any exercise by OWNER or CONTRACTOR of such rights or remedies as either may otherwise have under the Contract Documents or by Laws or Regulations in respect of any such claim, dispute or other matter pursuant to Article 16.

9.13. ***Limitations on PROFESSIONAL's Authority and Responsibilities:***

9.13.1. Neither PROFESSIONAL's authority or responsibility under this Article 9 or under any other provision of the Contract Documents nor any decision made by PROFESSIONAL in good faith either to exercise or not exercise such authority or responsibility or the undertaking, exercise or performance of any authority or responsibility by PROFESSIONAL shall create, impose or give rise to any duty owed by PROFESSIONAL to CONTRACTOR, any Subcontractor, any Supplier, any other person or organization, or to any surety for or employee or agent of any of them.

9.13.2. PROFESSIONAL will not supervise, direct, control or have authority over or be responsible for CONTRACTOR's means, methods, techniques, sequences or procedures of construction, or the safety precautions and programs incident thereto, or for any failure of CONTRACTOR to comply with Laws and Regulations applicable to the furnishing or performance of the Work. PROFESSIONAL will not be responsible for CONTRACTOR's failure to perform or furnish the Work in accordance with the Contract Documents.

9.13.3. PROFESSIONAL will not be responsible for the acts or omissions of CONTRACTOR or of any Subcontractor, any Supplier, or of any other person or organization performing or furnishing any of the Work.

9.13.4. PROFESSIONAL's review of the final Application for Payment and accompanying documentation and all maintenance and operating instructions, schedules, guarantees, bonds and certificates of inspection, tests and approvals and other documentation required to be delivered by paragraph 14.12 will only be to determine generally that their content complies with the requirements of, and in the case of certificates of inspection, tests and approvals that the results certified indicate compliance with, the Contract Documents.

9.13.5. The limitations upon authority and responsibility set forth in this paragraph 9.13 shall also apply to PROFESSIONAL's Consultants, Resident Project Representative and assistants.

9.13.6. Insofar as jobsite safety is concerned, the PROFESSIONAL shall be responsible solely for his or her own and his or her employees' activities on the

jobsite, but this shall not be construed to relieve the CONTRACTOR from its responsibility for maintaining a safe jobsite. Neither the professional activities of the PROFESSIONAL, nor the presence of the PROFESSIONAL or his or her employees, subconsultant and SubCONTRACTORs, shall be construed to imply the PROFESSIONAL has any responsibility for methods of work performance, superintendence, sequencing of construction, or safety in, on or about the jobsite. The OWNER and CONTRACTOR agree that the CONTRACTOR is solely responsible for jobsite safety.

ARTICLE 10——CHANGES IN THE WORK

10.1. Without invalidating the Agreement and without notice to any surety, OWNER may, at anytime or from time to time, order additions, deletions or revisions in the Work. Such additions, deletions or revisions will be authorized by a Written Amendment, a Change Order, or a Work Change Directive. Upon receipt of any such document, CONTRACTOR shall promptly proceed with the Work involved which will be performed under the applicable conditions of the Contract Documents (except as otherwise specifically provided).

10.2. If OWNER and CONTRACTOR are unable to agree as to the extent, if any, of an adjustment in the Contract Price or an adjustment of the Contract Times that should be allowed as a result of a Work Change Directive, a claim may be made therefor as provided in Article 11 or Article 12.

10.3. CONTRACTOR shall not be entitled to an increase in the Contract Price or an extension of the Contract Times with respect to any Work performed that is not required by the Contract Documents as amended, modified and supplemented as provided in paragraphs 3.5 and 3.6 except in the case of an emergency as provided in paragraph 6.23 or in the case of uncovering Work as provided in paragraph 13.9.

10.4. OWNER and CONTRACTOR shall execute appropriate Change Orders recommended by PROFESSIONAL (or Written Amendments) covering:

10.4.1 changes in the Work which are (i) ordered by OWNER pursuant to paragraph 10.1, (ii) required because of acceptance of *defective* Work under paragraph 13.13 or correcting *defective* Work under paragraph 13.14, or (iii) agreed to by the parties;

10.4.2. changes in the Contract Price or Contract Times which are agreed to by the parties; and

10.4.3. changes in the Contract Price or Contract Times which embody the substance of any written decision rendered by PROFESSIONAL pursuant to paragraph 9.11;

provided that, in lieu of executing any such Change Order, an appeal may be taken from any such decision in accordance with the provisions of the Contract Documents and applicable Laws and Regulations, but during any such appeal, CONTRACTOR shall carry on the Work and adhere to the progress schedule as provided in paragraph 6.29.

10.5. If notice of any change affecting the general scope of the Work or the provisions of the Contract Documents (including, but not limited to, Contract Price or Contract Times) is required by the provisions of any Bond to be given to a surety, the giving of any such notice will be CONTRACTOR's responsibility, and the amount of each applicable Bond will be adjusted accordingly.

ARTICLE 11——CHANGE OF CONTRACT PRICE

11.1. The Contract Price constitutes the total compensation (subject to authorized adjustments) payable to CONTRACTOR for performing the Work. All duties, responsibilities and obligations assigned to or undertaken by CONTRACTOR shall be at CONTRACTOR's expense without change in the Contract Price.

11.2. The Contract Price may only be changed by a Change Order or by a Written Amendment. Any claim for an adjustment in the Contract Price shall be based on written notice delivered by the party making the claim to the other party and to PROFESSIONAL promptly (but in no event later than thirty days) after the start of the occurrence or event giving rise to the claim and stating the general nature of the claim. Notice of the amount of the claim with supporting data shall be delivered within sixty days after the start of such occurrence or event (unless PROFESSIONAL allows additional time for claimant to submit additional or more accurate data in support of the claim) and shall be accompanied by claimant's written statement that the adjustment claimed covers all known amounts to which the claimant is entitled as a result of said occurrence or event. All claims for adjustment in the Contract Price shall be determined by PROFESSIONAL in accordance with paragraph 9.11 if OWNER and CONTRACTOR cannot otherwise agree on the amount involved. No claim for an

adjustment in the Contract Price will be valid if not submitted in accordance with this paragraph 11.2.

11.3. The value of any Work covered by a Change Order or of any claim for an adjustment in the Contract Price will be determined as follows:

11.3.1. where the Work involved is covered by unit prices contained in the Contract Documents, by application of such unit prices to the quantities of the items involved (subject to the provisions of paragraphs 11.9.1 through 11.9.2, inclusive);

11.3.2. where the Work involved is not covered by unit prices contained in the Contract Documents, by a mutually agreed lump sum (which may include an allowance for overhead and profit not necessarily in accordance with paragraph 11.6.2);

11.3.3. where the Work involved is not covered by unit prices contained in the Contract Documents and agreement to a lump sum is not reached under paragraph 11.3.2, on the basis of the Cost of the Work (determined as provided in paragraphs 11.4 and 11.5) plus a CONTRACTOR's fee for overhead and profit (determined as provided in paragraph 11.6).

Cost of the Work:

11.4. The term Cost of the Work means the sum of all costs necessarily incurred and paid by CONTRACTOR in the proper performance of the Work. Except as otherwise may be agreed to in writing by OWNER, such costs shall be in amounts no higher than those prevailing in the locality of the Project, shall include only the following items and shall not include any of the costs itemized in paragraph 11.5:

11.4.1. Payroll costs for employees in the direct employ of CONTRACTOR in the performance of the Work under schedules of job classifications agreed upon by OWNER and CONTRACTOR. Such employees shall include without limitation superintendents, foremen and other personnel employed full-time at the site. Payroll costs for employees not employed full time on the Work shall be apportioned on the basis of their time spent on the Work. Payroll costs shall include, but not be limited to, salaries and wages plus the cost of fringe benefits which shall include social security contributions, unemployment, excise and payroll taxes, workers' compensation, health and retirement benefits, bonuses, sick leave, vacation and holiday pay applicable thereto. The expenses of performing Work after regular working hours, on Saturday, Sunday or legal holidays, shall be included in the above to the extent authorized by OWNER.

11.4.2. Cost of all materials and equipment furnished and incorporated in the Work, including costs of transportation and storage thereof, and Suppliers' field services required in connection therewith. All cash discounts shall accrue to CONTRACTOR unless OWNER deposits funds with CONTRACTOR with which to make payments, in which case the cash discounts shall accrue to OWNER. All trade discounts, rebates and refunds and returns from sale of surplus materials and equipment accrue to OWNER, and CONTRACTOR shall make provisions so that they may be obtained.

11.4.3. Payments made by CONTRACTOR to the Subcontractors for Work performed or furnished by Subcontractors. If required by OWNER, CONTRACTOR shall obtain competitive bids from subcontractors acceptable to OWNER and CONTRACTOR and shall deliver such bids to OWNER who will then determine, with the advice of PROFESSIONAL, which bids, if any, will be accepted. If any subcontract provides that the Subcontractor is to be paid on the basis of Cost of the Work plus a fee, the Subcontractor's Cost of the Work and fee shall be determined in the same manner as CONTRACTOR's Cost of the Work and fee as provided in paragraphs 11.4, 11.5, 11.6 and 11.7. All subcontracts shall be subject to the other provisions of the Contract Documents insofar as applicable.

11.4.4. Costs of special consultants (including but not limited to engineers, architects, testing laboratories, surveyors, attorneys and accountants) employed for services specifically related to the Work.

11.4.5. Supplemental costs including the following:

11.4.5.1. The proportion of necessary transportation, travel and subsistence expenses of CONTRACTOR's employees incurred in discharge of duties connected with the Work.

11.4.5.2. Cost, including transportation and maintenance, of all materials, supplies, equipment, machinery, appliances, office and temporary facilities at the site and hand tools not owned by the workers, which are consumed in the performance of the Work, and cost less market value of such items used but not consumed which remain the property of CONTRACTOR.

11.4.5.3. Rentals of all construction equipment and machinery and the parts thereof whether rented from CONTRACTOR or others

in accordance with rental agreements approved by OWNER with the advice of PROFESSIONAL, and the costs of transportation, loading, unloading, installation, dismantling and removal thereof——all in accordance with the terms of said rental agreements. The rental of any such equipment, machinery or parts shall cease when the use thereof is no longer necessary for the Work.

11.4.5.4. Sales, consumer, use or similar taxes related to the Work, and for which CONTRACTOR is liable, imposed by Laws and Regulations.

11.4.5.5. Deposits lost for causes other than negligence of CONTRACTOR, any Subcontractor or anyone directly or indirectly employed by any of them or for whose acts any of them may be liable, and royalty payments and fees for permits and licenses.

11.4.5.6. Losses and damages (and related expenses) caused by damage to the Work, not compensated by insurance or otherwise, sustained by CONTRACTOR in connection with the performance and furnishing of the Work (except losses and damages within the deductible amounts of property insurance established by OWNER in accordance with paragraph 5.9), provided they have resulted from causes other than the negligence of CONTRACTOR, any Subcontractor, or anyone directly or indirectly employed by any of them or for whose acts any of them may be liable. Such losses shall include settlements made with the written consent and approval of OWNER. No such losses, damages and expenses shall be included in the Cost of the Work for the purpose of determining CONTRACTOR's fee. If, however, any such loss or damage requires reconstruction and CONTRACTOR is placed in charge thereof, CONTRACTOR shall be paid for services a fee proportionate to that stated in paragraph 11.6.2.

11.4.5.7. The cost of utilities, fuel and sanitary facilities at the site.

11.4.5.8. Minor expenses such as telegrams, long distance telephone calls, telephone service at the site, expressage

and similar petty cash items in connection with the Work.

11.4.5.9. Cost of premiums for additional Bonds and insurance required because of changes in the Work.

11.5. The term Cost of the Work shall not include any of the following:

11.5.1. Payroll costs and other compensation of CONTRACTOR's officers, executives, principals (of partnership and sole proprietorships), general managers, engineers, architects, estimators, attorneys, auditors, accountants, purchasing and contracting agents, expediters, timekeepers, clerks and other personnel employed by CONTRACTOR whether at the site or in CONTRACTOR's principal or a branch office for general administration of the Work and not specifically included in the agreed upon schedule of job classifications referred to in paragraph 11.4.1 or specifically covered by paragraph 11.4.4—-all of which are to be considered administrative costs covered by the CONTRACTOR's fee.

11.5.2. Expenses of CONTRACTOR's principal and branch offices other than CONTRACTOR's office at the site.

11.5.3. Any part of CONTRACTORS's capital expenses, including interest on CONTRACTOR's capital employed for the Work and charges against CONTRACTOR for delinquent payments .

11.5.4. Cost of premiums for all Bonds and for all insurance whether or not CONTRACTOR is required by the Contract Documents to purchase and maintain the same (except for the cost of premiums covered by subparagraph 11.4.5.9 above).

11.5.5. Costs due to the negligence of CONTRACTOR, any Subcontractor, or anyone directly or indirectly employed by any of them or for whose acts any of them may be liable, including but not limited to, the correction of *defective*Work, disposal of materials or equipment wrongly supplied and making good any damage to property.

Other overhead or general expense costs of any kind and the costs of any item not specifically and expressly included in paragraph 11.4.

11.6. The CONTRACTOR's fee allowed to CONTRACTOR for overhead and profit shall be determined as follows:

11.6.1. a mutually acceptable fixed fee; or

11.6.2. If a fixed fee is not agreed upon, then a fee based on the following percentages of the various portions of the Cost of the Work:

11.6.2.1. for costs incurred under paragraphs 11.4.1 and 11.4.2, the CONTRACTOR's fee shall be fifteen percent;

11.6.2.2. for costs incurred under paragraph

11.4.3, the CONTRACTOR's fee shall be five percent;

11.6.2.3. where one or more tiers of subcontracts are on the basis of Cost of the Work plus a fee and no fixed fee is agreed upon, the intent of paragraphs 11.4.1, 11.4.2, 11.4.3 and 11.6.2 is that only the Subcontractor who actually performs or furnishes the Work, at whatever tier, will be paid a fee of ten percent of the costs incurred by such Subcontractor under paragraphs 11.4.1 and 11.4.2 and that only the CONTRACTOR will be paid a fee of five percent of the amount paid to the Subcontractor;

11.6.2.4. no fee shall be payable on the basis of costs itemized under paragraphs 11.4.4, 11.4.5 and 11.5;

11.6.2.5. the amount of credit to be allowed by CONTRACTOR to OWNER for any change which results in a net decrease in cost will be the amount of the actual net decrease in cost plus a deduction in CONTRACTOR's fee by an amount equal to five percent of such net decrease; and

11.6.2.6. when both additions and credits are involved in any one change, the adjustment in CONTRACTOR's fee shall be computed on the basis of the net change in accordance with paragraphs 11.6.2.1 through 11.6.2.5, inclusive.

11.7. Whenever the cost of any Work is to be determined pursuant to paragraphs 11.4 and 11.5, CONTRACTOR will establish and maintain records thereof in accordance with generally accepted accounting practices and submit in form acceptable to PROFESSIONAL an itemized cost breakdown together with supporting data.

Cash Allowances:

11.8. It is understood that CONTRACTOR has included in the Contract Price all allowances so named in the Contract Documents and shall cause the Work so covered to be furnished and performed for such sums as may be acceptable to OWNER and PROFESSIONAL. CONTRACTOR agrees that:

11.8.1. the allowances include the cost to CONTRACTOR (less any applicable trade discounts) of materials and equipment required by the allowances to be delivered at the site, and all applicable taxes; and

11.8.2. CONTRACTOR's costs for unloading and handling on the site, labor, installation costs, overhead, profit and other expenses contemplated for the allowances have been included in the Contract Price and not in the allowances and no demand for additional payment on account of any of the foregoing will be valid.

Prior to final payment, an appropriate Change Order will be issued as recommended by PROFESSIONAL to reflect actual amounts due CONTRACTOR on account of Work covered by allowances, and the Contract Price shall be correspondingly adjusted.

11.9. ***Unit Price Work:***

11.9.1. Where the Contract Documents provide that all or part of the Work is to be Unit Price Work, initially the Contract Price will be deemed to include for all Unit Price Work an amount equal to the sum of the established unit price for each separately identified item of Unit price Work times the estimated quantity of each item as indicated in the Agreement. The estimated quantities of items of Unit Price Work are not guaranteed and are solely for the purpose of comparison of Bids and determining an initial Contract Price. Determinations of the actual quantities and classifications of Unit Price Work performed by CONTRACTOR will be made by PROFESSIONAL in accordance with paragraph 9.10.

11.9.2. Each unit price will be deemed to include an amount considered by CONTRACTOR to be adequate to cover CONTRACTOR's overhead and profit for each separately identified item.

ARTICLE 12——CHANGE OF CONTRACT TIMES

12.1. The Contract Times (or Milestones) may only be changed by a Change Order or a Written Amendment. Any claim for an adjustment of the Contract Times (or Milestones) shall be based on written notice delivered by the party making the claim to the other party and to PROFESSIONAL promptly (but in no event later than thirty days) after the occurrence of the event giving rise

to the claim and stating the general nature of the claim. Notice of the extent of the claim with supporting data shall be delivered within sixty days after such occurrence (unless PROFESSIONAL allows an additional period of time to ascertain more accurate data in support of the claim) and shall be accompanied by the claimant's written statement that the adjustment claimed is the entire adjustment to which the claimant has reason to believe it is entitled as a result of the occurrence of said event. All claims for adjustment in the Contract Times (or Milestones) shall be determined by PROFESSIONAL in accordance with paragraph 9.11 if OWNER and CONTRACTOR cannot otherwise agree. No claim for an adjustment in the Contract Times (or Milestones) will be valid if not submitted in accordance with the requirements of the paragraph 12.1.

12.2. All time limits stated in the Contract Documents are of the essence of the Agreement.

12.3. Where CONTRACTOR is prevented from completing any part of the Work within the Contract Times (or Milestones) due to delay beyond the control of CONTRACTOR, the Contract Times (or Milestones) will be extended in an amount equal to the time lost due to such delay if a claim is made therefor as provided in paragraph 12.1. Delays beyond the control of CONTRACTOR shall include, but not be limited to, acts or neglect by OWNER, acts or neglect of utility owners or other contractors performing other work as contemplated by Article 7, fires, floods, epidemics, abnormal weather conditions or acts of God.

Delays attributable to and within the control of a Subcontractor or Supplier shall be deemed to be delays within the control of CONTRACTOR.

12.4. Where CONTRACTOR is prevented from completing any part of the Work within the Contract Times (or Milestones) due to delay beyond the control of both OWNER and CONTRACTOR, an extension of the Contract Times (or Milestones) in an amount equal to the time lost due to such delay shall be CONTRACTOR's sole and exclusive remedy for such delay. In no event shall OWNER be liable to CONTRACTOR, any Subcontractor, any Supplier, any other person or organization, or to any surety for or employee or agent of any of them, for damages arising out of or resulting from (i) delays caused by or within the control of CONTRACTOR, or (ii) delays beyond the control of both parties including but not limited to fires, floods, epidemics, abnormal weather conditions, acts of God or acts or neglect by utility owners or other contractors performing other work as contemplated by Article 7.

ARTICLE 13——TESTS AND INSPECTIONS; CORRECTION, REMOVAL OR ACCEPTANCE OF DEFECTIVE WORK

13.1. *Notice of Defects:* Prompt notice of all *defective* Work of which OWNER or PROFESSIONAL have actual knowledge will be given to CONTRACTOR. All *defective* Work may be rejected, corrected or accepted as provided in this Article 13.

Access to Work:

13.2. OWNER, PROFESSIONAL, PROFESSIONAL'S Consultants, other representatives and personnel of OWNER, independent testing laboratories and governmental agencies with jurisdictional interests will have access to the Work at reasonable times for their observation, inspecting and testing. CONTRACTOR shall provide them proper and safe conditions for such access and advise them of CONTRACTOR's site safety procedures and programs so that they may comply therewith as applicable.

Tests and Inspections:

13.3. CONTRACTOR shall give PROFESSIONAL timely notice of readiness of the Work for all required inspections, tests or approvals, and shall cooperate with inspection and testing personnel to facilitate required inspections or tests.

13.4. OWNER shall employ and pay for the services of an independent testing laboratory to perform all inspections, tests, or approvals required by the Contract Documents except:

13.4.1. for inspections, tests or approvals covered by paragraph 13.5 below;

13.4.2. that costs incurred in connection with tests or inspections conducted pursuant to paragraph 13.9 below shall be paid as provided in said paragraph 13.9; and

13.4.3. as otherwise specifically provided in the Contract Documents.

13.5. If Laws or Regulations of any public body having jurisdiction require any Work (or part thereof) specifically to be inspected, tested or approved by an employee or other representative of such public body, CONTRACTOR shall assume full responsibility for arranging and obtaining such inspections, tests or approvals, pay all costs in connection therewith, and furnish PROFESSIONAL the required certificates of

inspection, or approval. CONTRACTOR shall also be responsible for arranging and obtaining and shall pay all costs in connection with any inspections, tests or approvals required for OWNER's and PROFESSIONAL's acceptance of materials or equipment to be incorporated in the Work, or of materials, mix designs, or equipment submitted for approval prior to CONTRACTOR's purchase thereof for incorporation in the Work.

13.6. If any Work (or the work of others) that is to be inspected, tested or approved is covered by CONTRACTOR without written concurrence of PROFESSIONAL, it must, if requested by PROFESSIONAL, be uncovered for observation.

13.7. Uncovering Work as provided in paragraph 13.6 shall be at CONTRACTOR's expense unless CONTRACTOR has given PROFESSIONAL timely notice of CONTRACTOR's intention to cover the same and PROFESSIONAL has not acted with reasonable promptness in response to such notice.

Uncovering Work:

13.8. If any Work is covered contrary to the written request of PROFESSIONAL, it must, if requested by PROFESSIONAL, be uncovered for PROFESSIONAL's observation and replaced at CONTRACTOR's expense.

13.9. If PROFESSIONAL considers it necessary or advisable that covered Work be observed by PROFESSIONAL or inspected or tested by others, CONTRACTOR, at PROFESSIONAL's request, shall uncover, expose or otherwise make available for observation, inspection or testing as PROFESSIONAL may require, that portion of the Work in question, furnishing all necessary labor, material and equipment. If it is found that such Work is *defective,* CONTRACTOR shall pay all claims, costs, losses and damages caused by, arising out of or resulting from such uncovering, exposure, observation, inspection and testing and of satisfactory replacement or reconstruction (including but not limited to all costs of repair or replacement of work of others); and OWNER shall be entitled to an appropriate decrease in the Contract Price, and, if the parties are unable to agree as to the amount thereof, may make a claim therefor as provided in Article 11. If, however, such Work is not found to be *defective,* CONTRACTOR shall be allowed an increase in the Contract Price or an extension of the Contract Times (or Milestones), or both, directly attributable to such uncovering, exposure, observation, inspection, testing, replacement and reconstruction; and, if the parties are unable to agree as to the amount or extent thereof, CONTRACTOR may make a claim therefor as provided in Articles 11 and 12.

OWNER May Stop the Work:

13.10. If the Work is *defective,* or CONTRACTOR fails to supply sufficient skilled workers or suitable materials or equipment, or fails to furnish or perform the Work in such a way that the completed Work will conform to the Contract Documents, OWNER may order CONTRACTOR to stop the Work, or any portion thereof, until the cause for such order has been eliminated; however, this right of OWNER to stop the Work shall not give rise to any duty on the part of OWNER to exercise this right for the benefit of CONTRACTOR or any surety or other party.

Correction or Removal of Defective Work:

13.11. If required by PROFESSIONAL, CONTRACTOR shall promptly, as directed, either correct all *defective* Work, whether or not fabricated, installed or completed, or, if the Work has been rejected by PROFESSIONAL, remove it from the site and replace it with Work that is not defective. CONTRACTOR shall pay all claims, costs, losses and damages caused by or resulting from such correction or removal (including but not limited to all costs of repair or replacement of work of others).

13.12. ***Correction Period:***

13.12.1. If within one year after the date of Substantial Completion or such longer period of time as may be prescribed by Laws or Regulations or by the terms of any applicable special guarantee required by the Contract Documents or by any specific provision of the Contract Documents, any Work is found to be *defective,* CONTRACTOR shall promptly, without cost to OWNER and in accordance with OWNER's written instructions: (i) correct such defective Work, or, if it has been rejected by OWNER, remove it from the site and replace it with Work that is not *defective,* and (ii) satisfactorily correct or remove and replace any damage to other Work or the work of others resulting therefrom. If CONTRACTOR does not promptly comply with the terms of such instructions, or in an emergency where delay would cause serious risk of loss or damage, OWNER may have the *defective* Work corrected or the rejected Work removed and replaced, and all claims, costs, losses and damages caused by or resulting from such removal and replacement (including but not limited to all costs of repair or replacement of work of others) will be paid by CONTRACTOR.

13.12.2. In special circumstances where a particular item of equipment is placed in continuous service before Substantial Completion of all the Work, the correction period for that item may start to run from an earlier date if so provided in the Specifications or by Written Amendment.

13.12.3. Where *defective* Work (and damage to other Work resulting therefrom) has been corrected, removed or replaced under this paragraph 13.12, the correction period hereunder with respect to such Work will be extended for an additional period of one year after such correction or removal and replacement has been satisfactorily completed.

Acceptance of Defective Work:

13.13. If, instead of requiring correction or removal and replacement of *defective* Work, OWNER (and, prior to PROFESSIONAL's recommendation of final payment, also PROFESSIONAL) prefers to accept it, OWNER may do so. CONTRACTOR shall pay all claims, costs, losses and damages attributable to OWNER'S evaluation of and determination to accept such *defective* Work (such costs to be approved by PROFESSIONAL as to reasonableness). If any such acceptance occurs prior to PROFESSIONAL's recommendation of final payment, a Change Order will be issued incorporation the necessary revisions in the Contract Documents with respect to the Work; and OWNER shall be entitled to an appropriate decrease in the Contract Price, and, if the parties are unable to agree as to the amount thereof, OWNER may make a claim therefor as provided in Article 11. If the acceptance occurs after such recommendation, an appropriate amount will be paid by CONTRACTOR to OWNER.

OWNER May Correct Defective Work:

13.14. If CONTRACTOR fails within a reasonable time after written notice from the PROFESSIONAL to correct *defective* Work or to remove and replace rejected Work as required by PROFESSIONAL in accordance with paragraph 13.11, of if CONTRACTOR fails to perform the Work in accordance with the Contract Documents, or if CONTRACTOR fails to comply with any other provision of the Contract Documents, OWNER may, after seven days' written notice to CONTRACTOR, correct and remedy any such deficiency. In exercising the rights and remedies under this paragraph OWNER shall proceed expeditiously. In connection with such corrective and remedial action, OWNER may exclude CONTRACTOR from all or part of the site, take possession of all or part of the Work, and suspend CONTRACTOR's services related thereto, take possession of CONTRACTOR's tools, appliances, construction equipment and machinery at the site and incorporate in the Work all materials and equipment stored at the site or for which OWNER has paid CONTRACTOR but which are stored elsewhere. CONTRACTOR shall allow OWNER, OWNER's representatives, agents and employees, OWNER's other contractors and PROFESSIONAL and PROFESSIONAL's Consultants access to the site to enable OWNER to exercise the rights and remedies under this paragraph. All claims, costs, losses and damages incurred or sustained by OWNER in exercising such rights and remedies will be charged against CONTRACTOR and a Change Order will be issued incorporating the necessary revisions in the Contract Documents with respect to the Work; and OWNER shall be entitled to an appropriate decrease in the Contract Price, and, if the parties are unable to agree as to the amount thereof, OWNER may make a claim therefor as provided in Article 11. Such claims, costs, losses and damages will include but not be limited to all costs of repair or replacement of work of others destroyed or damaged by correction, removal or replacement of CONTRACTOR's *defective* Work. CONTRACTOR shall not be allowed an extension of the Contract Times (or Milestone) because of any delay in the performance of the Work attributable to the exercise by OWNER of OWNER'S rights and remedies hereunder.

ARTICLE 14——PAYMENTS TO CONTRACTOR AND COMPLETION

Schedule of Values:

14.1. The schedule of values established as provided in paragraph 2.9 will serve as the basis for progress payments and will be incorporated into a form of Application for Payment acceptable to PROFESSIONAL. Progress payments on account of Unit Price Work will be based on the number of units completed.

Application for Progress Payment

14.2. At least twenty days before the date established for each progress payment (but not more often than once a month), CONTRACTOR shall consult with PROFESSIONAL and review an Application for Payment filled out and signed by CONTRACTOR covering the Work completed as of the date of the Application and accompanied by such supporting documentation as is required by the Contract Documents. If payment is requested on the basis of materials and equipment not incorporated in the Work but delivered and suitably stored at the site or at another location

agreed to in writing, the Application for Payment shall also be accompanied by a bill of sale, invoice or other documentation from the supplier, warranting that OWNER has received the materials and equipment free and clear of all Liens and evidence that the materials and equipment are covered by appropriate property insurance and other arrangements to protect OWNER's interest therein, all of which will be satisfactory to OWNER. The amount of retainage with respect to progress payments will be as stipulated in the Agreement.

CONTRACTOR's Warranty of Title

14.3. CONTRACTOR warrants and guarantees that title to all Work, materials and equipment covered by any Application for Payment, whether incorporated in the Project or not, will pass to OWNER no later than the time of payment free and clear of all Liens.

Review of Applications for Progress Payment:

14.4. PROFESSIONAL will, within ten days after receipt of each application for payment, either indicate in writing a recommendation of payment and present the application to OWNER, or return the application to CONTRACTOR indicating in writing PROFESSIONAL's reasons for refusing to recommend payment. In the latter case, CONTRACTOR may make the necessary corrections and resubmit the Application. Ten days after presentation of the Application for Payment to OWNER with PROFESSIONAL's recommendation, the amount recommended will (subject to the provisions of the last sentence of paragraph 14.7) become due and when due will be paid by OWNER to CONTRACTOR.

14.5. PROFESSIONAL's recommendation of any payment requested in an Application for Payment will constitute a representation by PROFESSIONAL to OWNER, based on PROFESSIONAL's on-site observations of the executed Work as an experienced and qualified design professional and on PROFESSIONAL's review of the Application for Payment and the accompanying data and schedules, that to the best of PROFESSIONAL's knowledge, information and belief:

14.5.1. the Work has progressed to the point indicated,

14.5.2. the quality of the Work is generally in accordance with the Contract Documents (subject to an evaluation of the Work as a functioning whole prior to or upon Substantial Completion, to the results of any subsequent tests called for in the Contract Documents, to a final determination of quantities and classifications for Unit Price Work under paragraph 9.10, and to any other qualifications stated in the recommendation), and

14.5.3. the conditions precedent to CONTRACTOR's being entitled to such payment appear to have been fulfilled in so far as it is PROFESSIONAL's responsibility to observe the Work.

However, by recommending any such payment PROFESSIONAL will not thereby be deemed to have represented that: (i) exhaustive or continuous on-site inspections have been made to check the quality or the quantity of the Work beyond the responsibilities specifically assigned to PROFESSIONAL in the Contract Documents or (ii) that there may not be other matters or issues between the parties that might entitle CONTRACTOR to be paid additionally by OWNER or entitle OWNER to withhold payment to CONTRACTOR.

14.6. PROFESSIONAL's recommendation of any payment, including final payment, shall not mean that PROFESSIONAL is responsible for CONTRACTOR's means, methods, techniques, sequences or procedures of construction, or the safety precautions and programs incident thereto, or for any failure of CONTRACTOR to comply with laws and Regulations applicable to the furnishing or performance of Work, or for any failure of CONTRACTOR to perform or furnish Work in accordance with the Contract Documents.

14.7. PROFESSIONAL may refuse to recommend the whole or any part of any payment if, in PROFESSIONAL's opinion, it would be incorrect to make the representations to OWNER referred to in paragraph 14.5. PROFESSIONAL may also refuse to recommend any such payment, or, because of subsequently discovered evidence or the results of subsequent inspections or test, nullify any such payment previously recommended to such extent as may be necessary in PROFESSIONAL's opinion to protect OWNER from loss because:

14.7.1. the Work is defective, or completed Work has been damaged requiring correction or replacement,

14.7.2. the Contract Price has been reduced by Written Amendment or Change Order,

14.7.3. OWNER has been required to correct *defective* Work or complete Work in accordance with paragraph 13.14, or

14.7.4. PROFESSIONAL has actual knowledge of the occurrence of any of the events enumerated in paragraphs 15.2.1 through 15.2.4 inclusive.

OWNER may refuse to make payment of the full amount recommended by PROFESSIONAL because:

14.7.5. claims have been made against OWNER on account of CONTRACTOR's performance or furnishing of the Work,

14.7.6. Liens have been filed in connection with the Work, except where CONTRACTOR has delivered a specific Bond satisfactory to OWNER to secure the satisfaction and discharge of such Liens,

14.7.7. there are other items entitling OWNER to a set-off against the amount recommended, or

14.7.8. OWNER has actual knowledge of the occurrence of any of the events enumerated in paragraphs 14.7.1 through 14.7.3 or paragraphs 15.2.1 through 15.2.4 inclusive; but OWNER must give CONTRACTOR immediate written notice (with a copy to PROFESSIONAL) stating the reasons for such action and promptly pay CONTRACTOR the amount so withheld, or any adjustment thereto agreed to by OWNER and CONTRACTOR, when CONTRACTOR corrects to OWNER's satisfaction the reasons for such action.

Substantial Completion:

14.8. When CONTRACTOR considers the entire Work ready for its intended use, CONTRACTOR shall notify OWNER and PROFESSIONAL in writing that the entire Work is substantially complete (except for items specifically listed by CONTRACTOR as incomplete) and request that PROFESSIONAL issue a certificate of Substantial Completion. Within a reasonable time thereafter, OWNER, CONTRACTOR and PROFESSIONAL shall make an inspection of the Work to determine the status of completion. If PROFESSIONAL does not consider the Work substantially complete, PROFESSIONAL will notify CONTRACTOR in writing giving the reasons therefor. If PROFESSIONAL considers the Work substantially complete, PROFESSIONAL will prepare and deliver to OWNER a tentative certificate of Substantial Completion which shall fix the date of Substantial Completion. There shall be attached to the certificate a tentative list of items to be completed or corrected before final payment. OWNER shall have seven days after receipt of the tentative certificate during which to make written objection to PROFESSIONAL as to any provisions of the certificate or attached list. If, after considering such objections, PROFESSIONAL concludes that the Work is not substantially complete, PROFESSIONAL will within fourteen days after submission of the tentative certificate to OWNER notify CONTRACTOR in writing, stating the reasons therefor. If, after consideration of OWNER's objections, PROFESSIONAL considers the Work Substantially complete, PROFESSIONAL will within said fourteen days execute and deliver to OWNER and CONTRACTOR a definitive certificate of Substantial Completion (with a revised tentative list of items to be completed or corrected) reflecting such changes from the tentative certificate as PROFESSIONAL believes justified after consideration of any objections from OWNER. At the time of delivery of the tentative certificate of Substantial Completion PROFESSIONAL will deliver to OWNER and CONTRACTOR a written recommendation as to division of responsibilities pending final payment between OWNER and CONTRACTOR with respect to security, operation, safety, maintenance, heat, utilities, insurance and warranties and guarantees. Unless OWNER and CONTRACTOR agree otherwise in writing and so inform PROFESSIONAL in writing prior to PROFESSIONAL's issuing the definitive certificate of Substantial Completion, PROFESSIONAL's aforesaid recommendation will be binding on OWNER and CONTRACTOR until final payment.

14.9. OWNER shall have the right to exclude CONTRACTOR from the Work after the date of Substantial Completion, but OWNER shall allow CONTRACTOR reasonable access to complete or correct items on the tentative list.

Partial Utilization:

14.10. Use by OWNER at OWNER'S option of any substantially completed part of the Work which: (i) has specifically been identified in the Contract Documents, or (ii) OWNER, PROFESSIONAL and CONTRACTOR agree constitutes a separately functioning and usable part of the Work that can be used by OWNER for its intended purpose without significant interference with CONTRACTOR's performance of the remainder of the Work, may be accomplished prior to Substantial Completion of all the Work subject to the following:

14.10.1. OWNER at any time may request CONTRACTOR in writing to permit OWNER to use any such part of the Work which OWNER believes to be ready for its intended use and substantially complete. If CONTRACTOR agrees that such part of the Work is substantially complete, CONTRACTOR will certify to OWNER and PROFESSIONAL that such part of the Work is substantially complete and request

PROFESSIONAL to issue a certificate of Substantial Completion for that part of the Work. CONTRACTOR at any time may notify OWNER and PROFESSIONAL in writing that CONTRACTOR considers any such part of the Work ready for its intended use and substantially complete and request PROFESSIONAL to issue a certificate of Substantial Completion for that part of the Work. Within a reasonable time after either such request, OWNER, CONTRACTOR and PROFESSIONAL shall make an inspection of that part of the Work to determine its status of completion. If PROFESSIONAL does not consider that part of the Work to be substantially complete, PROFESSIONAL will notify OWNER and CONTRACTOR in writing giving the reasons therefor. If PROFESSIONAL considers that part of the Work to be substantially complete, the provisions of paragraphs 14.8 and 14.9 will apply with respect to certification of Substantial Completion of that part of the Work and the division of responsibility in respect thereof and access thereto.

14.10.2. No occupancy or separate operation of part of the Work will be accomplished prior to compliance with the requirements of paragraph 5.15 in respect of property insurance.

Final Inspection:

14.11. Upon written notice from CONTRACTOR that the entire Work or an agreed portion thereof is complete, PROFESSIONAL will make a final inspection with OWNER and CONTRACTOR and will notify CONTRACTOR in writing of all particulars in which this inspection reveals that the Work is incomplete or *defective*. CONTRACTOR shall immediately take such measures as are necessary to complete such Work or remedy such deficiencies.

Final Application for Payment:

14.12. After CONTRACTOR has completed all such corrections to the satisfaction of PROFESSIONAL and delivered in accordance with the Contract Documents all maintenance and operating instructions, schedules, guarantees, Bonds, certificates or other evidence of insurance required by paragraph 5.4, certificates of inspection, marked-up record documents (as provided in paragraph 6.19) and other documents, CONTRACTOR may make application for final payment following the procedure for progress payments. The final Application for Payment shall be accompanied (except as previously delivered) by: (i) all documentation called for in the Contract Documents, including but not limited to the evidence of insurance required by subparagraph 5.4.13, (ii) consent of the surety, if any, to final payment, and (iii) complete and legally effective releases or waivers (satisfactory to OWNER) of all Liens arising out of or filed in connection with the Work. In lieu of such releases or waivers of Liens and as approved by OWNER, CONTRACTOR may furnish receipts or releases in full and an affidavit of CONTRACTOR that:(i) the releases and receipts include all labor, services, material and equipment for which a Lien could be filed, and (ii) all payrolls, material and equipment bills and other indebtedness connected with the Work for which OWNER or OWNER's property might in any way be responsible have been paid or otherwise satisfied. If any Subcontractor or Supplier fails to furnish such a release or receipt in full, CONTRACTOR may furnish a Bond or other collateral satisfactory to OWNER to indemnify OWNER against any Lien.

Final Payment and Acceptance:

14.13. If, on the basis of PROFESSIONAL's observation of the Work during construction and final inspection, and PROFESSIONAL's review of the final Application for Payment and accompanying documentation as required by the Contract Documents, PROFESSIONAL is satisfied that the Work has been completed and CONTRACTOR's other obligations under the Contract Documents have been fulfilled, PROFESSIONAL will, within ten days after receipt of the final Application for Payment, indicate in writing PROFESSIONAL's recommendation of payment and present the Application to OWNER for payment. At the same time PROFESSIONAL will also give written notice to OWNER and CONTRACTOR that the Work is acceptable subject to the provisions of paragraph 14.15. Otherwise, PROFESSIONAL will return the Application to CONTRACTOR, indicating in writing the reasons for refusing to recommend final payment, in which case CONTRACTOR shall make the necessary corrections and resubmit the Application. Thirty days after the presentation to OWNER of the Application and accompanying documentation, in appropriate form and substance and with PROFESSIONAL's recommendation and notice of acceptability, the amount recommended by PROFESSIONAL will become due and will be paid by OWNER to CONTRACTOR.

14.14. If, through no fault of CONTRACTOR, final completion of the Work is significantly delayed and if PROFESSIONAL so confirms, OWNER shall, upon receipt of CONTRACTOR's final Application for Payment and recommendation of PROFESSIONAL, and without terminating the Agreement, make payment of the balance due for that portion of the Work fully completed and accepted. If the remaining balance to be held by OWNER for Work not fully completed or corrected is less than the retainage stipulated in the Agreement, and if Bonds have been furnished as required in paragraph 5.1, the written consent of the surety to the payment of the

balance due for that portion of the Work fully completed and accepted shall be submitted by CONTRACTOR to PROFESSIONAL with the Application for such payment. Such payment shall be made under the terms and conditions governing final payment, except that it shall not constitute a waiver of claims.

Waiver of Claims:

14.15. The making and acceptance of final payment will constitute:

14.15.1. a waiver of all claims by OWNER against CONTRACTOR, except claims arising from unsettled Liens, from *defective* Work appearing after final inspection pursuant to paragraph 14.11, from failure to comply with the Contract Documents or the terms of any special guarantees specified therein, or from CONTRACTOR's continuing obligations under the Contract Documents; and

14.15.2. a waiver of all claims by CONTRACTOR against OWNER other than those previously made in writing and still unsettled.

ARTICLE 15——SUSPENSION OF WORK AND TERMINATION

OWNER May Suspend Work

15.1. At any time and without cause, OWNER may suspend the Work or any portion thereof for a period of not more than ninety days by notice in writing to CONTRACTOR and PROFESSIONAL which will fix the date on which Work will be resumed. CONTRACTOR shall resume the Work on the date so fixed. CONTRACTOR shall be allowed an adjustment in the Contract Price or an extension of the Contract Times, or both, directly attributable to any such suspension if CONTRACTOR makes an approved claim therefor as provided in Articles 11 and 12.

OWNER May Terminate:

15.2. Upon the occurrence of any one or more of the following events:

15.2.1. if CONTRACTOR persistently fails to perform the Work in accordance with the Contract Documents (including, but not limited to, failure to supply sufficient skilled workers or suitable materials or equipment or failure to adhere to the progress schedule established under paragraph 2.9 as adjusted from time to time pursuant to paragraph 6.6);

15.2.2. if CONTRACTOR disregards Laws or Regulations of any public body having jurisdiction;

15.2.3. if CONTRACTOR disregards the authority of PROFESSIONAL; or

15.2.4. if CONTRACTOR otherwise violates in any substantial way any provisions of the Contract Documents;

OWNER may, after giving CONTRACTOR (and the surety, if any,) seven days' written notice and to the extent permitted by Laws and Regulations, terminate the services of CONTRACTOR, exclude CONTRACTOR from the site and take possession of the Work and of all CONTRACTOR's tools, appliances, construction equipment and machinery at the site and use the same to the full extent they could be used by CONTRACTOR (without liability to CONTRACTOR for trespass or conversion), incorporate in the Work all materials and equipment stored at the site or for which OWNER has paid CONTRACTOR but which are stored elsewhere, and finish the Work as OWNER may deem expedient. In such case CONTRACTOR shall not be entitled to receive any further payment until the Work is finished. If the unpaid balance of the Contract Price exceeds all claims, costs, losses and damages sustained by OWNER arising out of or resulting from completing the Work, such excess will be paid to CONTRACTOR. If such claims, costs, losses and damages exceed such unpaid balance, CONTRACTOR shall pay the difference to OWNER. Such claims, costs, losses and damages incurred by OWNER will be reviewed by PROFESSIONAL as to their reasonableness and when so approved by PROFESSIONAL incorporated in a Change Order, provided that when exercising any rights or remedies under this paragraph OWNER shall not be required to obtain the lowest price for the Work performed.

15.3. Where CONTRACTOR's services have been so terminated by OWNER, the termination will not affect any rights or remedies of OWNER against CONTRACTOR then existing or which may thereafter accrue. Any retention or payment of moneys due CONTRACTOR by OWNER will not release CONTRACTOR from liability.

15.4. Upon seven days' written notice to CONTRACTOR and PROFESSIONAL, OWNER may, without cause and without prejudice to any other right or remedy of OWNER, elect to terminate the Agreement. In such case, CONTRACTOR shall be paid (without duplication of any items):

15.4.1. for completed and acceptable Work executed in accordance with the Contract Documents prior to the effective date of termination, including fair and reasonable sums for overhead and profit on such Work;

15.4.2. for expenses sustained prior to the effective date of termination in performing services and furnishing labor, materials or equipment as required by the Contract Documents in connection with uncompleted Work, plus fair and reasonable sums for overhead and profit on such expenses;

15.4.3. for all claims, costs, losses and damages incurred in settlement of terminated contracts with Subcontractors, Suppliers and others; and

15.4.4. for reasonable expenses directly attributable to termination.

CONTRACTOR shall not be paid on account of loss of anticipated profits or revenue or other economic loss arising out of or resulting from such termination.

CONTRACTOR May Stop Work or Terminate:

15.5. If, through no act or fault of CONTRACTOR, the Work is suspended for a period of more than ninety days by OWNER or under an order of court or other public authority, or PROFESSIONAL fails to act on any Application for Payment within thirty days after it is submitted or OWNER fails for thirty days to pay CONTRACTOR any sum finally determined to be due, then CONTRACTOR may, upon seven days' written notice to OWNER and PROFESSIONAL, and provided OWNER or PROFESSIONAL do not remedy such suspension or failure within that time, terminate the Agreement and recover from OWNER payment on the same terms as provided in paragraph 15.4. In lieu of terminating the Agreement and without prejudice to any other right or remedy, if PROFESSIONAL has failed to act on an Application for Payment within thirty days after it is submitted, or OWNER has failed for thirty days to pay CONTRACTOR any sum finally determined to be due, CONTRACTOR may upon seven day's written notice to OWNER and PROFESSIONAL stop the Work until payment of all such amounts due CONTRACTOR, including interest thereon. The provisions of this paragraph 15.5 are not intended to preclude CONTRACTOR from making claim under Articles 11 and 12 for an increase in Contract Price or Contract Times or otherwise for expenses or damage directly attributable to CONTRACTOR's stopping Work as permitted by this paragraph.

ARTICLE 16——DISPUTE RESOLUTION

If and to the extent that OWNER and CONTRACTOR have agreed on the method and procedure for resolving disputes between them that may arise under this Agreement, such dispute resolution method and procedure shall be as follows. If no such agreement on the method and procedure for resolving such disputes has been reached, and subject to the provisions of paragraphs 9.10, 9.11, and 9.12, OWNER and CONTRACTOR may exercise such rights or remedies as either may otherwise have under the Contract Documents or by Laws or Regulations in respect of any dispute.

ALTERNATE DISPUTE RESOLUTION (ADR) AGREEMENT

OWNER and CONTRACTOR hereby agree that Article 16 of the General Conditions to the Agreement between OWNER and CONTRACTOR is amended to include the following agreement of the parties:

16.1 OWNER and CONTRACTOR agree that they shall first submit any and all unsettled claims, counterclaims, disputes and other matters in question between them arising out of or relating to the Contract Documents or the breach thereof ("disputes"), to mediation by the American Arbitration Association under the Construction Industry Mediation Rules of the American Arbitration Association prior to either of them initiating against the other types of demands.

16.1.1 **Agreement of Parties -** Whenever, by stipulation or in their contract, the parties have provided for mediation for existing or future disputes under the auspices of the American Arbitration Association (AAA) or under these Rules, they shall be deemed to have made these Rules, as amended and in effect as of the date of the submission of the dispute, a part of their agreement.

16.1.2 **Initiation of Mediation -** Any party or parties to a dispute may initiate mediation by filing with the AAA a written request for mediation pursuant to these Rules, together with the appropriate administrative fee contained in the Administrative Fee Schedule.

16.1.3 **Request for Mediation -** A request for mediation shall contain a brief statement of the nature of the dispute and the names, addresses, and phone numbers of all parties to the dispute, and those who will represent them, if any, to the mediation. The initiating party shall simultaneously file two (2) copies of the request with the AAA and one copy with every other party to the dispute.

16.1.4 **Appointment of Mediator -** Upon receipt of a request for mediation, the AAA will appoint a qualified mediator or standing neutral facilitator to serve. Normally, a single mediator will be appointed unless the parties agree otherwise or the AAA determines otherwise. If the agreement of the parties name a mediator or specifies a method of appointing a mediator, that designation or method shall be followed.

16.1.5 **Qualifications of a Mediator -**Any mediator appointed shall be a member of the AAA's Construction Mediation Panel, with expertise in the area of the dispute and knowledgeable in the mediation process. As an alternative, a standing neutral facilitator for ADR as certified by the Michigan Society of Professional Engineers may be used.

No person shall serve as a mediator in any dispute in which that person has any financial or personal interest in the result of the mediation, except by the written consent of all parties. Prior to accepting an appointment, the prospective mediator shall disclose any circumstances likely to create a presumption of bias or prevent a prompt meeting with the parties. Upon receipt of such information, the AAA shall either replace the mediator or immediately communicate the information to the parties for their comments. In the event the parties disagree as to whether the mediator shall serve, the AAA will appoint another mediator. The AAA is authorized to appoint another mediator if the appointed mediator is unable to serve promptly.

16.1.6 **Vacancies -** If any mediator shall become unwilling or unable to serve, the AAA will appoint another mediator, unless the parties agree otherwise.

16.1.7 **Representation -** Any party may be represented by persons of their choice. The names and addresses of such persons shall be communicated in writing to all parties and to the AAA.

16.1.8 **Time and Place of Mediation -** The mediator shall fix the time of each mediation session. The mediation shall be held at the appropriate regional office of the AAA, or at any other convenient location agreeable to the mediator and the parties, as the mediator shall determine.

16.1.9 **Identification of Matters in Dispute -** At least ten (10) days prior to the first scheduled mediation session, each party shall provide the mediator with a brief memorandum setting forth its position with regard to the issues that need to be resolved. At the discretion of the mediator, such memoranda may be mutually exchanged by the parties.

At the first session, the parties will be expected to produce all information reasonably required for the mediator to understand the issue presented. The mediator may require either party to supplement such information.

16.1.10 **Authority of Mediator -** The mediator does not have authority to impose a settlement upon the parties but will attempt to help the parties reach a satisfactory resolution of their dispute. The mediator is authorized to conduct joint and separate meetings with the parties and to make oral and written recommendations for settlement. Whenever necessary, the mediator may also obtain expert advice concerning technical aspects of the dispute, provide the parties agree and assume the expenses of obtaining such advice. Arrangements for obtaining such advice shall be made by the mediator or the parties, as the mediator shall determine.

The mediator is authorized to end the mediation whenever, in the judgment of the mediator, further efforts at mediation would not contribute to a resolution of the dispute between parties.

16.1.11 **Privacy -** Mediation sessions are private. The parties and their representatives may attend mediation sessions. Other persons may attend only with the permission of the parties and with the consent of the mediator.

16.1.12 **Confidentiality -** Confidential information disclosed to a mediator by the parties or by witnesses in the course of the mediation shall not be divulged by the mediator. All records, reports, or other documents received by a mediator while serving in such records or to testify in regard to the mediation in any adversary proceeding or judicial forum.

The parties shall maintain the confidentiality of the mediation and shall not rely on, or introduce as evidence in any arbitral, judicial or other proceedings:(a) views expressed or suggestions made by the other party with respect to a possible settlement of the dispute; (b) admissions made by the other party in the course of the mediation proceedings; (c) proposals made or views expressed by the mediator; (d) the fact that the other party had or had not indicated willingness to accept a proposal for resettlement made by the mediator.

16.1.13 **No Stenographic Record -** There shall be no stenographic record of the mediation process.

16.1.14 **Termination of Mediation -** The mediation shall be terminated:(a) by the execution of a settlement agreement by the parties; or (b) by a written declaration of the mediator to the effect that further efforts at mediation are no longer worthwhile; or (c) by a written declaration of a party or parties to the effect that the mediation proceedings are terminated.

16.1.15 **Exclusion of Liability -** Neither the AAA nor the mediator is a necessary party in judicial proceedings relating to the mediation.

Neither the AAA nor any mediator shall be liable to any party for any act or omission in connection with any mediation conducted under these Rules.

16.1.16 **Interpretation and Application of Rules -** The mediator shall interpret and apply these Rules insofar as they relate to the mediator's duties and responsibilities. All other Rules shall be interpreted and applied by the AAA.

16.1.17 **Expenses -** The expenses of witnesses for either side shall be paid by the party producing such witnesses. All other expenses of the mediation, including required traveling and other expenses of the mediator and representatives of the AAA, and the expenses of any witness, or the cost of any proofs or expert advice produced at the direct request of the mediator, shall be borne equally by the parties unless they agree otherwise.

16.2 Except as provided in paragraph 16.3 below, no mediation arising out of or relating to the Contract Documents shall include by consolidation, joinder or in any other manner any other person or entity (including PROFESSIONAL, PROFESSIONAL's Consultant and the officers, directors, agents, employees or consultants of any of them) who is not a part to this contract unless:

16.2.1 the inclusion of such other person or entity is necessary if complete relief is to be afforded among those who are already parties to the mediation and

16.2.2 such other person or entity is substantially involved in a question of law or fact which is common to those who are already parties to the mediation and which will arise in such proceedings.

16.3 Notwithstanding paragraph 16.2 if a claim, dispute or other matter in question between OWNER and CONTRACTOR involves the Work of a Subcontractor, either OWNER or CONTRACTOR may join such Subcontractor as a party to the mediation between OWNER and CONTRACTOR hereunder. CONTRACTOR shall include in all subcontracts required by paragraph 6.11 a specific provision whereby the Subcontractor consents to being joined in a mediation between OWNER and CONTRACTOR involving the Work of such subcontract, and consenting to joinder shall not create any claim, right or cause of action in favor of Subcontractor and against OWNER, PROFESSIONAL or PROFESSIONAL's Consultants that does not otherwise exist.

ARTICLE 17——MISCELLANEOUS

Giving Notice:

17.1. Whenever any provision of the Contract Documents requires the giving of written notice, it will be deemed to have been validly given if delivered in person to the individual or to a member of the firm or to an officer of the corporation for whom it is intended, or if delivered at or sent by registered or certified mail, postage prepaid, to the last business address known to the giver of the notice.

Computation of Time:

17.2 When any period of time is referred to in the Contract Documents by days, it will be computed to exclude the first and include the last day of such period. If the last day of any such period falls on a Saturday or Sunday or on a day made a legal holiday by the law of the applicable jurisdiction, such day will be omitted from the computation.

17.2.1. A calendar day of twenty-four hours measured from midnight to the next midnight will constitute a day.

Notice of Claim:

17.3. Should OWNER or CONTRACTOR suffer injury or damage to person or property because of any error, omission or act of the other party or of any of the other party's employees or agents or others for whose acts the other party is legally liable, claim will be made in writing to the other party within a reasonable time of the first observance of such injury or damage. The provisions of this paragraph 17.3 shall not be construed as a substitute for or a waiver of the provisions of any applicable statute of limitations or repose.

Cumulative Remedies:

17.4. The duties and obligations imposed by these General Conditions and the rights and remedies available hereunder to the parties hereto, and, in particular but without limitation, the warranties, guarantees and obligations imposed upon CONTRACTOR by paragraphs 6.12, 6.16, 6.30, 6.31, 6.32, 13.1, 13.12, 13.14, 14.3 and 15.2 and all of the rights and remedies available to OWNER and PROFESSIONAL thereunder, are in addition to, and are not to be construed in any way as a limitation of, any rights and remedies available to any or all of them which are otherwise imposed or available by Laws or Regulations, by special warranty or guarantee or by other provisions of the Contract Documents, and the provisions of this paragraph will be as effective as if repeated specifically in the Contract Documents in connection with each particular duty, obligation, right and remedy to which they apply.

Professional Fees and Court Costs Included:

17.5. Whenever reference is made to "claims, costs, losses and damages," it shall include in each case, but not be limited to, all fees and charges of engineers, architects, attorneys and other professionals and all court or arbitration or other dispute resolution costs.

INSURANCE COVERAGES

The insurance required by Article 5 of the General Conditions shall be for the following coverages and shall be not less than the following amounts or greater where required by Laws and Regulations but shall not prevent the CONTRACTOR from requiring additional coverage is necessary and prudent for the particular situation.

Contractor is also required to carry all insurances required of the Contractor/Licensee in order to perform work in the railroad right-of-way belonging to Genesee & Wyoming Railroad (GWRR). Insurance limits for railroad company can be found in Appendix A. The GWRR insurance requirements can be found in Exhibit C of the GWRR agreement.

WORKERS' COMPENSATION	**MINIMUM LIMITS (000's)**
Part One: Compensation	Statutory
Part Two: Employers' Liability:	
accident	$ 100
disease	$ 100
aggregate disease	$ 500
COMMERCIAL GENERAL LIABILITY	
General Aggregate Limit	$1,000
Products/Completed Operations Aggregate Limit	$1,000
Personal/Advertising Injury	$1,000
Each Occurrence Limit	$1,000
COMPREHENSIVE AUTOMOBILE LIABILITY	
Bodily Injury-Each Occurrence Limit	$ 500
Property Damage-Each Occurrence Limit	$ 250
OR	
Combined Single Limit	$1,000
No Fault	Statutory
OWNER'S AND CONTRACTOR'S PROTECTIVE LIABILITY	
Aggregate Limit	$1,000
Each Occurrence Limit	$1,000
OR	

In lieu of the Owner’s and Contractor’s Protective Liability, the Contractor may provide an endorsement to their policy for a per project aggregate coverage with the following limits:

Aggregate Limit	$1,000
Each Occurrence Limit	$1,000
(ISO form CG2503 or its equivalent)	

A copy of this endorsement must accompany the Certificate of Insurance, the Certificate will clearly state the additional insured requirement and the policy contains the per project aggregate endorsement.

UMBRELLA or EXCESS LIABILITY $2,000

Insurance required by paragraphs 5.4.3 through 5.4.6 inclusive of the General Conditions shall name as named additional insureds:

Blank Tile Drain Drainage District, Saginaw County Public Works Commissioner, Spicer Group, Inc., Saginaw County Road Commission, Michigan Department of Transportation and Richland Township.

Clear Form | Instructions

Michigan Department of Transportation 2020 (02/07)

CERTIFICATE OF INSURANCE FOR PERMITTED ACTIVITIES IN MICHIGAN DEPARTMENT OF TRANSPORTATION RIGHT OF WAY

ALL INSURANCE INFORMATION MUST BE SUBMITTED ON FORM 2020. ANY OTHER FORM IS INVALID.

The subscribing insurance company certifies that insurance of the types and limits of liability listed below have been issued to the insured named below for the policy period indicated.

Such insurance, here certified, is written in accordance with the company's regular policies and endorsements subject to the company's applicable manuals of rules and rate, except that the insurance shall include, but not be limited to, coverage for: (a) underground damage to facilities due to drilling and excavating with mechanical equipment; and (b) collapse or structural injury to structures due to blasting or explosion, excavation, tunneling, pile driving, cofferdam work, or building moving or demolition.

(1) The subscribing company agrees to give 30 days prior written notice to the Michigan Department of Transportation in the event of cancellation or reduction in coverage by the Insurance Company for reasons other than nonpayment of premium.
(2) The subscribing company agrees to give 10 days prior written notice to the Michigan Department of Transportation in the event of cancellation by the Insurance Company for nonpayment of premium.
(3) The subscribing company agrees to give immediate written notice to the Michigan Department of Transportation in the event the contractor cancels or reduces the coverage of any insurance certified below.

NAME OF INSURED	TELEPHONE NUMBER

ADDRESS	Street	City	State	Zip Code

CO LTR	TYPE OF INSURANCE	POLICY NUMBER	POLICY DATES (MM/DD/YY) EFFECTIVE	EXPIRATION	CATEGORY	MIN. LIMITS	POLICY AMOUNTS	
	GENERAL LIABILITY				GENERAL AGGREGATE	$ 2,000,000		
	☐ COMMERCIAL GENERAL				PRODUCTS - COMP/OP AGG.			
	☐ OCCURRENCE				PERSONAL AND ADV. INJURY			
					EACH OCCURRENCE	$ 1,000,000		**A**
					FIRE DAMAGE (Any one fire)			
					MEDICAL EXP(Any one person)			
			AND					
	AUTOMOBILE LIABILITY				COMBINED SINGLE LIMIT	$ 1,000,000		**B**
	☐ ANY AUTO				**OR**			
	☐ ALL OWNED AUTOS				BODILY INJURY (Per person)	$ 500,000		
	☐ SCHEDULED AUTOS							
	☐ HIRED AUTOS				BODILY INJURY (Per accident)	$ 1,000,000		**C**
	☐ NON-OWNED AUTOS							
	☐				PROPERTY DAMAGE	$ 1,000,000		
	☐							
			OR					
	EXCESS LIABILITY							
	☐ UMBRELLA FORM				EACH OCCURRENCE	$ 1,000,000		**D**
	☐							
	☐				AGGREGATE	$ 1,000,000		

ADDITIONAL INSURED:
The State of Michigan, Michigan Transportation Commission, Department of Transportation, and governmental bodies performing permit activities under a maintenance contract, and all officers, agents and employees of all the above, for claims arising out of, under, or by reason of operations covered by the permit issued to the permittee. If applicable, _____ (county) and County Road Commission are also insured.

NAME OF INSURANCE COMPANIES AFFORDING COVERAGE	NAME OF AGENCY
COMPANY LETTER	ADDRESS
COMPANY LETTER	
COMPANY LETTER	

BY: (Authorized Representative Signature)	TITLE	DATE	TELEPHONE NUMBER

NOTICE TO SURETY/INSURANCE COMPANIES FOR OBTAINING ACCESS TO THE

MDOT PERMIT PERFORMANCE BONDS AND MDOT CERTIFICATE OF INSURANCE APPLICATION

Effective February 1, 2010, Certificate of Insurance (form 2020) and/or the Permit Performance Bond must be submitted electronically via the Permit Performance Bond/Certificate of Insurance application system.

However, the Surety and/or Insurance agent is required to register, if they have not previously registered, with our office in order to obtain access to the Permit Performance Bond/Certificate of Insurance application system. Surety and/or Insurance agents may contact Anna Swanson at swansona1@michigan.gov or call 517-373-7680 to register or if you have any questions.

Note: The applicant/contractor does not register for access to this application, Surety/Insurance agents only.

PROJECT NO. 122848SG2015	PROJECT NAME/ LOCATION Blank Tile Drain Saginaw County, Michigan	**CHANGE ORDER NO.: 1**
CONTRACT NO.		**DATE:**

CONTRACTOR/ADDRESS	OWNER/ADDRESS	CONSULTANT/ADDRESS
	Saginaw County Public Works Commissioner 111 S. Michigan Avenue Saginaw, MI 48602	Spicer Group, Inc. 230 South Washington Avenue Saginaw, Michigan 48607

COMMENTS:

ITEM NO.	DESCRIPTION	QUANTITY CONTRACT*	QUANTITY NEW	UNIT	UNIT PRICE	CONTRACT* AMOUNT	CH. ORDER AMOUNT	NET CHANGE

The Contractor agrees to complete the work per this Change Order under the direction of the Engineer and to accept payment for the work as indicated in this Change Order.

*** Contract Quantities and contract amounts include all previous change orders.**

TOTAL CHANGE ORDER (+ OR -) **$0.00**

The foregoing is in accordance with your contract and the change and work affected thereby is subject to all contract stipulations and convents. An equitable adjustment, for the changes ordered, is established as follows:
* Contract Quantities and contract amounts include all previous change orders.

CONTRACT PRICE:		CONTRACT TIME:	Original Contract Time	Revised Contract Time
Original Contract Amount				
Contract Amount with Previous Change Orders				
This Change Order (+ or -)	$0.00	Substantial Completion		
New Contract Amount	**$0.00**	Final Completion		

SUBMITTED: by Engineer	ACCEPTED: by Contractor	APPROVED: by Owner
Nicholas Czerwinski, P.E. Spicer Group, Inc.		Brian Wendling Saginaw County Public Works Commissioner
DATE:	DATE:	DATE:

LANDOWNER AGREEMENT FORM

Project Name: BLANK TILE DRAIN

Date:

Contractor's Name:
Address:

Landowner's Name:
Address:

Agreement:

CONTRACTOR	**LANDOWNER**
By: (Authorized Signature)	By: (Authorized Signature)
Date:	Date:

*Renters cannot authorize.
*Landowner agreeing to take spoils must level or remove spoils prior to final completion of project.

CERTIFICATE OF SUBSTANTIAL COMPLETION

PROJECT: Blank Tile Drain

DATE OF ISSUANCE.....

OWNER: Saginaw County Public Works Commissioner

OWNER's Contract No.: 122848SG2015

CONTRACTOR .....PROFESSIONAL: Spicer Group, Inc.

This Certificate of Substantial Completion applies to all Work under the Contract Documents or to the following specified parts thereof:

TO: SAGINAW COUNTY PUBLIC WORKS COMMISSIONER

And To.....
CONTRACTOR

The Work to which this Certificate applies has been inspected by authorized representatives of OWNER, CONTRACTOR and PROFESSIONAL, and that Work is hereby declared to be substantially complete in accordance with the Contract Documents on

DATE OF SUBSTANTIAL COMPLETION

A tentative list of items to be completed or corrected is attached hereto. This list may not be all-inclusive, and the failure to include an item in it does not alter the responsibility of CONTRACTOR to complete all the Work in accordance with the Contract Documents. The items in the tentative list shall be completed or corrected by CONTRACTOR within _____ days of the above date of Substantial Completion.

EJCDC No. 1910-8-D (1990 Edition)
Prepared by the Engineers Joint Contract Documents Committee and endorsed by The Associated General Contractors of America.

From the date of Substantial Completion the responsibilities between OWNER and CONTRACTOR for security, operation, safety, maintenance, heat, utilities, insurance and warranties and guarantees shall be as follows:

RESPONSIBILITIES:

OWNER:

CONTRACTOR:

The following documents are attached to and made a part of this Certificate:

[For items to be attached see definition of Substantial Completion as supplemented and other specifically noted conditions precedent to achieving Substantial Completion as required by Contract Documents.]

This certificate does not constitute an acceptance of Work not in accordance with the Contract Documents nor is it a release of CONTRACTOR's obligation to complete the Work in accordance with the Contract Documents.

Executed by PROFESSIONAL on .. .., 2016

PROFESSIONAL

By: ....
(Authorized Signature)

CONTRACTOR accepts this Certificate of Substantial Completion on .. .. , 2016

CONTRACTOR

By: ....

OWNER accepts this Certificate of Substantial Completion on ...., 2016

OWNER

By: ....
(Authorized Signature)

SECTION 01010

SUMMARY OF WORK

1. PART 1 GENERAL

1. 1 SECTION INCLUDES

A. Scope of Work.

B. Contractor use of site.

C. Utilities Constructed Within Public Streets.

1. 2 SCOPE OF WORK

A. Furnish labor, tools, equipment, and materials for the construction of the Project as shown on the drawings and described in the specification.

B. The Owner will obtain easements and rights-of-way needed for construction.

1. 3 CONTRACTOR USE OF SITE

A. Limit use of site to allow:
1. Owner occupancy.
2. Work by others.
3. Use of site by public.

B. Emergency Building Exits During Construction: Maintain ingress and egress for business in the area.

C. Construction Operations: Limited to areas noted on Drawings.

D. Utility Outages and Shutdown: Schedule temporary shutdowns of active utilities at times which will cause the least interference with service use and as approved by the utility owner, customer serviced, Owner and Engineer.

1. 4 UTILITIES CONSTRUCTED WITHIN PUBLIC STREETS

A. Conform to the requirements of the City, County, Township, Village, MDOT or authority having jurisdiction over the road.

B. Obtain and pay for construction permits from the authority having jurisdiction in order to work in the public road right-of-way.

C. Notify the Engineer and authority 2 working days in advance of the intention to cross a roadway.

D. Install and maintain traffic control devices in accordance with Section 01570 Traffic Regulation and the Michigan Manual of Uniform Traffic Control Devices (MMUTCD).

E. Contractor shall be liable for all accidents and damage occasioned in any way by his acts or neglect or by the acts or neglect of his sub contractors, agents, employees or workmen.

END OF SECTION

SECTION 01019

CONTRACT CONSIDERATIONS

1. PART 1 GENERAL

1. 1 SECTION INCLUDES

A. Application for Payment.

B. Change procedures.

1. 2 RELATED SECTIONS

A. Section 01600 - Material and Equipment: Product substitutions and alternates.

B. Section 01700 - Contract Closeout.

1. 3 APPLICATIONS FOR PAYMENT

A. Payment shall be in accordance with Public Act 524-Payment Plan No. 2.

B. Format will follow the schedule of values bid in the proposal.

C. Submit invoices for stored materials.
1. Only on-site stored and secured materials will be paid for.
2. Stored materials shall be for this project only.

D. Submit waivers.

E. Submit updated construction schedule with each application for payment.

1. 4 CHANGE PROCEDURES

A. The Engineer will advise of minor changes in the Work not involving an adjustment to Contract Sum/Price or Contract Time as authorized by General Conditions, Paragraph 9.5 by issuing supplemental instructions on a Field Order.

B. The Engineer may issue a Notice of Change which includes a detailed description of a proposed change with supplementary or revised Drawings and specifications, a change in Contract Time for executing the change. Contractor will prepare and submit an estimate within 10 days.

C. The Contractor may propose a change by submitting request for change to the Engineer, describing the proposed change and its full effect on the Work. Include a statement describing the reason for the change, and the effect on the Contract Sum/Price and Contract Time with full documentation and a statement describing the effect on Work by separate or other contractors. Document any requested substitutions in accordance with Section 01600 – Material and Equipment.

D. Stipulated Sum/Price Change Order: Based on Notice of Change and Contractor's estimated price quotation or Contractor's request for a Change Order as approved by Engineer.

E. Unit Price Change Order: For pre-determined unit prices and quantities, the Change Order will be executed on a fixed unit price basis. For unit costs or quantities of units of work, which are not pre-determined, execute Work under a Work Directive Change. Changes in Contract Sum/Price or Contract Time will be computed as specified for Time and Material Change Order.

F. Work Directive Change: Engineer may issue a directive, signed by the Owner, instructing the Contractor to proceed with a change in the Work, for subsequent inclusion in a Change Order. Document will describe changes in the Work, and designate method of determining any change in Contract Sum/Price or Contract Time. Promptly execute the change.

G. Time and Material Force Account Change Order: Submit itemized account and supporting data after completion of change, within time limits indicated in the Conditions of the Contract. Engineer will determine the change allowable in Contract Sum/Price and Contract Time as provided in the Contract Documents.

H. Execution of Change Orders: Engineer will issue Change Orders for signatures of parties as provided in the Conditions of the Contract.

END OF SECTION

SECTION 01039

COORDINATION AND MEETINGS

1. PART 1 GENERAL

1. 1 SECTION INCLUDES

A. Coordination.

B. Field engineering.

C. Alteration project procedures.

D. Cutting and patching.

E. Preconstruction conference.

F. Site mobilization conference.

G. Progress meetings.

1. 2 COORDINATION

A. Coordinate scheduling, submittals, and Work of the various Sections of specifications to assure efficient and orderly sequence of installation of interdependent construction elements, with provisions for accommodating items installed later.

B. Coordinate completion and cleanup of Work of the various Sections of specifications in preparation for Substantial Completion.

C. Contractor to coordinate with public utilities if relocations are required during construction.

1. 3 FIELD ENGINEERING

A. Engineer will provide construction staking. Call and request in writing to the Engineer requesting staking 3 working days in advance of the time needed for the work.

B. Contractor to locate and protect survey control and reference points.

C. Control datum for survey is that on Drawings.

D. The Contractor shall pay for replacement of damaged or removed construction stakes.

E. Contractor to locate and protect survey control and reference points, land monuments, and property corners.

1. 4 ALTERATION PROJECT PROCEDURES

A. Materials: As specified in product Sections; match existing products and work for patching and extending work.

B. Close openings in exterior surfaces to protect existing work from weather and extremes of temperature and humidity.

C. Remove, cut, and patch work in a manner to minimize damage and to provide a means of restoring products and finishes to specified condition.

D. Where new work abuts or aligns with existing, perform a smooth and even transition.

1. 5 CUTTING AND PATCHING

A. Employ skilled and experienced installer to perform cutting and patching.

B. Submit written request in advance of cutting or altering elements which affects:
1. Structural integrity of element.
2. Integrity of weather-exposed or moisture-resistant elements.
3. Efficiency, maintenance, or safety of element.
4. Visual qualities of sight-exposed elements.
5. Work of Owner or separate Contractor.

C. Execute cutting, fitting, and patching including excavation and fill, to complete Work, and to:
1. Fit the several parts together, to integrate with other Work.
2. Uncover Work to install or correct ill-timed Work.
3. Remove and replace defective and non-conforming Work.

D. Execute work by methods, which will avoid damage to other Work, and provide proper surfaces to receive patching and finishing.

E. Cut rigid materials using masonry saw or core drill.

F. Restore Work with new products in accordance with requirements of Contract Documents.

G. Fit Work tight to pipes, sleeves, ducts, conduit, and other penetrations through surfaces.

H. Maintain integrity of wall, ceiling, or floor construction; completely seal voids.

I. Refinish surfaces to match adjacent finishes. For continuous surfaces, refinish to nearest intersection; for an assembly, refinish entire unit.

J. Identify any hazardous substance or condition exposed during the Work to the Engineer for decision or remedy.

K. Sawcut the full depth of all bituminous or concrete surfaces where the existing surface that is to remain in place meets the proposed surfaces. The direction of the sawcut shall be as directed by the Engineer.

1. 6 PRE-CONSTRUCTION CONFERENCE

A. Owner or Engineer will schedule a Preconstruction Conference.

B. Attendance Required: Owner, Engineer applicable governmental agencies, applicable public and private utilities, sub-contractors with substantial portions of the work and Contractor.

C. Agenda:
1. Introductions.
2. Utility Representatives comments and requirements.
3. Exchange of documents and permits.
4. Submission of list of Subcontractors, list of products, and progress schedule.
5. Designation of personnel representing the parties in Contract, along with contact phone numbers, and the Engineer.
6. Submission of list of supervisory personnel representing the Contractor and subcontractor along with daytime and emergency phone numbers.
7. Procedures and processing of field decisions, submittals, substitutions, applications for payments, proposal request, Change Orders and Contract closeout procedures.
8. Scheduling.
9. Items of special interest and attention.
10. Questions and comments.

1. 7 SITE MOBILIZATION CONFERENCE

A. Owner will schedule a conference at the Project site prior to Contractor occupancy.

B. Attendance Required: Owner, Engineer, Special Consultants, Contractor, Contractor's Superintendent, and major Subcontractors.

C. Agenda:
1. Use of premises by Owner and Contractor.
2. Owner's requirements.
3. Construction facilities and controls provided by Owner.
4. Survey and project layout.
5. Security and housekeeping procedures.
6. Schedules.
7. Procedures for testing.
8. Procedures for maintaining record documents.
9. Traffic control.

1. 8 PROGRESS MEETINGS

A. Engineer shall Schedule and administer meetings throughout progress of the Work at maximum bi-weekly intervals.

B. Contractor shall make arrangements for meetings, prepare agenda with copies for participants, preside at meetings, record minutes, and distribute copies within two working days to Engineer, Owner, participants, and those affected by decisions made.

C. Attendance Required: Job superintendent, major Subcontractors and suppliers, Owner, Engineer, as appropriate to agenda topics for each meeting.

D. Agenda:

1. Review minutes of previous meetings.
2. Review of Work progress.
3. Field observations, problems, and decisions.
4. Identification of problems which impede planned progress.
5. Review of submittals schedule and status of submittals.
6. Review of off-site fabrication and delivery schedules.
7. Maintenance of progress schedule.
8. Corrective measures to regain projected schedules.
9. Planned progress during succeeding work period.
10. Coordination of projected progress.
11. Maintenance of quality and work standards.
12. Effect of proposed changes on progress schedule and coordination.
13. Other business relating to Work.

END OF SECTION

SECTION 01300

SUBMITTALS

1. PART 1 GENERAL

1. 1 SECTION INCLUDES

A. Submittal procedures.

B. Construction progress schedules.

C. Shop drawings.

D. Product data.

E. Manufacturers' certificates.

1. 2 RELATED SECTIONS

A. Section 01019 - Contract Considerations

B. Section 01400 - Quality Control: Manufacturers' field services and reports.

C. Section 01700 - Contract Closeout: Contract warranty manufacturer's certificates and closeout submittals.

1. 3 SUBMITTAL PROCEDURES

A. Transmit each submittal, properly identified, with transmittal form.

B. Sequentially number the transmittal forms. Resubmittals to have original number with an alphabetic suffix.

C. Identify Project, Contractor, Subcontractor or supplier; pertinent Drawing sheet and detail number(s), and specification Section number, as appropriate.

D. Apply Contractor's stamp, signed or initialed certifying that review, verification of Products required, field dimensions, adjacent construction Work, and coordination of information, is in accordance with the requirements of the Work and Contract Documents.

E. Schedule submittals to expedite the Project, and deliver to Engineer at business address. Coordinate submission of related items.

F. Identify variations from Contract Documents and Product or system limitations, which may be detrimental to successful performance of the completed Work.

G. Provide space for Contractor and Engineer review stamps.

H. Revise and resubmit submittals as required, identify all changes made since previous submittal.

I. Distribute copies of reviewed submittals to concerned parties. Instruct parties to promptly report any inability to comply with provisions.

1. 4 CONSTRUCTION PROGRESS SCHEDULES

A. Submit initial progress schedule in duplicate within 15 days after date of Owner-Contractor Agreement for Engineer review.

B. Revise and resubmit as required.

C. Submit revised schedules identifying changes since previous version.

D. Submit a horizontal bar chart with a separate line for each major section of Work or operation identifying the first work day of each week.

E. Indicate estimated percentage of completion for each item of Work at each submission.

F. Indicate submittal dates required for shop drawings, product data, samples, and product delivery dates.

1. 5 SHOP DRAWINGS

A. Submit the number of opaque reproductions, which Contractor requires, plus three copies, which will be retained by the Engineer. The Engineer will mark up no more than eight copies.

B. After review distribute in accordance with Article on Procedures above and for Record Documents described in Section 01700 - Contract Closeout.

1. 6 PRODUCT DATA

A. Submit the number of copies, which the Contractor requires, plus three copies, which will be retained by the Engineer. The Engineer will mark up no more than eight copies.

B. Mark each copy to identify applicable products, models, options, and other data. Supplement manufacturers' standard data to provide information unique to this Project.

C. After review, distribute in accordance with Article on Procedures above and provide copies for Record Documents described in Section 01700 - Contract Closeout.

1. 7 MANUFACTURER'S CERTIFICATES

A. When specified in individual specification Sections, submit manufacturers' certificate to Engineer for review, in quantities specified for Product Data.

B. Indicate material or product conforms to or exceeds specified requirements. Submit supporting reference date, affidavits, and certifications as appropriate.

C. Certificates may be recent or previous test results on material or Product, but must be acceptable to Engineer.

END OF SECTION

SECTION 01400

QUALITY CONTROL

1. PART 1 GENERAL

1. 1 SECTION INCLUDES

A. Quality assurance and control of installation.

B. References.

C. Inspection and testing laboratory services.

D. Manufacturers' field services and reports.

E. Benchmarks and control elevations.

1. 2 RELATED SECTIONS

A. Section 01300 - Submittals: Submission of Manufacturers' Certificates.

B. Section 01600 - Material and Equipment: Requirements for material and product quality.

1. 3 QUALITY ASSURANCE/CONTROL OF INSTALLATION

A. Monitor quality control over suppliers, manufacturers, Products, services, site conditions, and workmanship, to produce Work of specified quality.

B. Comply fully with manufacturers' instructions, including each step in sequence.

C. Should manufacturers' instructions conflict with Contract Documents, request clarification from the Engineer before proceeding.

D. Comply with specified standards as a minimum quality for the work except when more stringent tolerances, codes, or specified requirements indicate higher standards or more precise workmanship.

E. Perform work by persons qualified to produce workmanship of specified quality.

F. Secure Products in place with positive anchorage devices designed and sized to withstand stresses, vibration, physical distortion or disfigurement.

1. 4 REFERENCES

A. Conform to reference standard by date of issue current on date of Contract Documents.

B. Should specified reference standards conflict with Contract Documents, request clarification from the Engineer before proceeding.

C. The contractual relationship of the parties to the Contract shall not be altered from the Contract Documents by mention or inference otherwise in any reference document.

1. 5 INSPECTION AND TESTING LABORATORY SERVICES

A. Owner will appoint, employ, and pay for services of the Engineer to perform inspection and testing.

B. The Engineer will perform inspections, tests, and other services specified in individual specification Sections and as required by the Owner.

C. Reports will be submitted by the Engineer to the Owner, in duplicate, indicating observations and results of tests and indicating compliance or non-compliance with Contract Documents.

D. Cooperate with the Engineer and the Owner; furnish samples of materials, design mix, equipment, tools, storage and assistance as requested.
   1. Notify Engineer 2 working days prior to expected time for operations requiring services.
   2. Make arrangements with Engineer and pay for additional samples and tests required for Contractor's use.

E. Retesting required because of non-conformance to specified requirements shall be performed by the same Engineer on instructions by the Owner. Payment for retesting will be charged to the Contractor by deducting inspection or testing charges from the Contract Sum/Price.

1. 6 MANUFACTURERS' FIELD SERVICES AND REPORTS

A. When specified in individual specification Sections, require material or Product suppliers or manufacturers to provide qualified staff personnel to observe site conditions, conditions of surfaces and installation, quality of workmanship, and to initiate instructions when necessary.

B. Individuals to report observations and site decisions or instructions given to applicators or installers that are supplemental or contrary to manufacturers' written instructions.

C. Submit report within 30 days of observation to the Engineer for review.

1. 7 BENCHMARKS AND CONTROL ELEVATIONS

A. Elevations for proposed work shall be set from bench marks established for this project.

B. Verify elevations of existing features against project benchmarks.

C. Notify Engineer of conflicts in elevations, which affect the proposed work.

END OF SECTION

SECTION 01500

CONSTRUCTION FACILITIES AND TEMPORARY CONTROLS

1. PART 1 GENERAL

1. 1 SECTION INCLUDES

A. Temporary Controls: Barriers, protection of the Work, and water control soil erosion and sedimentation control.

B. Progress cleaning.

C. Removal of utilities, facilities, and control.

D. Temporary driveways.

1. 2 RELATED SECTIONS

A. Section 01570 - Traffic Regulation.

B. Section 01700 - Contract Closeout: Final cleaning.

1. 3 UNIT PRICE - MEASUREMENT AND PAYMENT

A. Construction Facilities and Temporary Controls:
1. Basis of Measurement: Included in the unit price bid for utility installation.
2. Basis of Payment: Includes all associated labor, material and equipment required for Construction Facilities and Temporary Controls required for this project for a complete installation.

1. 4 BARRIERS

A. Provide barriers to prevent unauthorized entry to construction areas to allow for Owner's use of site, and to protect existing facilities and adjacent properties from damage from construction operations and demolition.

B. Provide protection for plant life designated to remain. Replace damaged plant life.

C. Protect non-owned vehicular traffic, stored materials, site and structures from damage.

D. Provide access to all adjacent buildings for use during construction.

1. 5 WATER CONTROL

A. Grade site to drain. Maintain excavations free of water. Provide, operate, and maintain pumping equipment.

B. Protect site from puddling or running water. Provide water barriers as required to protect site from soil erosion.

C. Trenches shall be dewatered to provide a stable base for structures and piping.

1. 6 SOIL EROSION AND SEDIMENTATION CONTROL

A. Conform to Part 91 of Public Act 451 of 1994, relative to Soil Erosion and Sedimentation Control for the life of the project.

B. Minimize amount of bare soil exposed at one time.

C. Provide temporary measures such as berms, dikes, and drains to prevent sediment from entering adjacent waterways.

D. Do not deposit trash, debris, or sediment in tile or open drains.

E. Immediately repair trenches located within the traveled surface of roadways.

F. Landscape construction areas as soon as practical after work is complete according to Sections 02923 - Landscape Grading, 02936 - Seeding.

1. 7 PROTECTION OF INSTALLED WORK

A. Protect installed Work and provide special protection where specified in individual specification Sections.

B. Provide temporary and removable protection for installed Products. Control activity in immediate work area to minimize damage.

C. Prohibit traffic from landscaped areas.

1. 8 PROTECTION OF EXISTING

A. CALL "MISS-DIG" (1-800-482-7171) A MINIMUM OF THREE WORKING DAYS PRIOR TO CONSTRUCTION.

B. Protect landscaped areas. Damaged areas shall be replaced in kind.

C. Protect utilities encountered during the work. Replace or repair damaged utilities.

D. Protect drives, roadways, and sidewalks. Repair as required in following sections.

E. Protect mailboxes. Relocate temporarily until mailboxes can be returned to original location. All mail boxes and posts must be returned to their original condition or better at no additional cost to the project.

F. Protect trees, shrubs, and bushes:
   1. Where trees, shrubs, and bushes are too large to be replaced in kind, the proposed utility shall be installed in a boring or tunneling operation unless written consent is given by the property owner for removal. Owner and Engineer shall each be given one copy of consent letters.
   2. Where requested by the Property Owner, timber from removed trees shall be cut into 6 foot lengths and stockpiled along the work or as specified in the consent letter.
   3. Proper disposal of removed trees or sections of removed trees not wanted by the property owner shall become the responsibility of the Contractor.
   4. Trees, shrubs, and bushes that are removed and replaced shall be transplanted by an established nursery.

G. Utilities must remain in service. If it becomes necessary to interrupt a utility service, the utility authority must be notified immediately and steps taken to restore temporary or permanent service as soon as possible.

H. Maintain outlets for drains. Provide temporary pumping if necessary.

I. Expose utility mains and services by hand in the trench.

J. Where utility and drainage piping crosses the trench, support the piping according to the utility authority's standards and backfill to the top with compacted sand.

1. 9 PROGRESS CLEANING

A. Maintain areas free of waste materials, debris, and rubbish. Maintain site in a clean and orderly condition.

B. Clean road surface daily to the Owner's and/or Engineer's satisfaction.

C. Complete leveling, remove excess material and debris and restore drainage not more than 1000 feet behind construction.

D. Remove waste materials, debris, and rubbish from site daily and dispose off-site.

1. 10 REMOVAL OF UTILITIES, FACILITIES, AND CONTROLS

A. Remove temporary above grade or buried utilities, equipment, facilities, materials, prior to Substantial Completion Final Application for Payment inspection.

B. Clean and repair damage caused by installation or use of temporary work.

C. Restore existing facilities used during construction to original condition. Restore permanent facilities used during construction to specified condition.

D. A sufficient sum of money to remove and replace or repair any utilities damaged or relocated during the construction of the project shall be included in total contract amount.

1. 11 TEMPORARY DRIVEWAY

A. Temporary driveways shall be constructed to provide safe, stable, and smooth access.

B. Driveways shall be finished and accepted by Owner before 100% completion of Work is accepted.

END OF SECTION

SECTION 01570

TRAFFIC REGULATION

1. PART 1 GENERAL

1. 1 SECTION INCLUDES

A. Construction Parking Control.

B. Flag Persons.

C. Flares and Lights.

D. Haul Routes.

E. Traffic Signs and Signals.

F. Removal.

G. Traffic Control.

1. 2 RELATED SECTIONS

A. Section 01010 - Summary of Work.

B. Section 01039 - Coordination and Meetings: Project coordination.

C. Section 01500 - Construction Facilities and Temporary Controls: Barriers and enclosures. Access roads and parking areas.

1. 3 UNIT PRICE - MEASUREMENT AND PAYMENT

A. Traffic Regulations:
1. Basis of Measurement: Included in the lump sum price bid for Traffic Control.
2. Basis of Payment: Includes all required traffic regulations to meet the requirements of the authority having jurisdiction, and all labor, material, and equipment necessary for traffic regulations for this project.

B. Traffic Control:
1. Basis of Measurement: Included in the lump sum price bid as stated in the proposal.
2. Basis of Payment: All required traffic regulations to meet the requirements of the authority having jurisdiction.

C. Railroad Flagman Allowance:
1. Basis of Measurement: At the lump sum bid price as stated in the proposal.
2. Basis of Payment: Contractor to provide estimated flagman budget based on anticipated time to complete open cut installation of storm sewer under G.W.R.R. tracks. Rate schedule: $750 per day for the first 8 hours, and $100 per hour for any hours over 8 hours. Allowance will be used to reimburse contractor based on actual invoiced amounts from the railroad up to the bid amount. Any unused allowance money will not be paid to the contractor, and any invoiced money over the bid amount will not be reimbursed.

1. 4 TRAFFIC CONTROL

A. Comply with the rules and regulations of the County, City, Township, Village, or MDOT having jurisdiction over the road.

B. Provide, install and maintain traffic control devices.

C. Control devices shall conform to the Michigan Manual of Uniform Traffic Control Devices and the MDOT Standard Specifications for Highway Construction.

D. Maintain through traffic unless written permission to do otherwise is obtained from the authority having jurisdiction over the road.

E. Provide and maintain detour signs if allowed to closed road.

1. 5 SIGNS, SIGNALS, AND DEVICES

A. Post Mounted and Wall Mounted Traffic Control and Informational Signs: Specified in paragraph 1.3 Traffic Control.

B. Automatic Traffic Control Signals: As approved by local jurisdictions.

C. Traffic Cones and Drums, Flares and Lights: As approved by local jurisdictions.

D. Flag Persons Equipment: As approved by local jurisdictions.

1. 6 CONSTRUCTION PARKING CONTROL

A. Control vehicular parking to prevent interference with public traffic and parking, access by emergency vehicles, access to businesses, access to dwellings, and Owner's operations.

B. Monitor parking of construction personnel's vehicles in existing facilities. Maintain vehicular access to and through parking areas.

C. Prevent parking on or adjacent to access roads or in non-designated areas.

D. Staging of equipment and storage of materials will not be allowed on business or residential parking areas without written permission from the landowner.

1. 7 FLAG PERSONS

A. Provide trained and equipped flag persons to regulate traffic when construction operations or traffic encroach on public traffic lanes.

1. 8 FLARES AND LIGHTS

A. Use flares and lights during hours of low visibility to delineate traffic lanes and to guide traffic.

1. 9 HAUL ROUTES

A. Consult with authority having jurisdiction in establishing public thoroughfares to be used for haul routes and site access.

B. Confine construction traffic to designated haul routes.

C. Provide traffic control at critical areas of haul routes to regulate traffic, to minimize interference with public traffic.

1. 10 TRAFFIC SIGNS AND SIGNALS - PLACEMENT AND OPERATION

A. At approaches to site and on site, install at crossroads, detours, parking areas, and elsewhere as needed to direct construction and affected public traffic.

B. Install and operate traffic control signals to direct and maintain orderly flow of traffic in areas under Contractor's control, and areas affected by Contractor's operations.

C. Relocate as Work progresses, to maintain effective traffic control.

1. 11 REMOVAL

A. Remove equipment and devices when no longer required.

B. Repair damage caused by installation.

C. Remove post settings to a depth of 2 feet.

END OF SECTION

SECTION 01600

MATERIAL AND EQUIPMENT

1. PART 1 GENERAL

1. 1 SECTION INCLUDES

A. Products.

B. Transportation and handling.

C. Storage and protection.

D. Product options.

E. Substitutions.

1. 2 RELATED SECTIONS

A. Instructions to Bidders (IB): Product options and substitution procedures.

B. Section 01400 - Quality Control: Product quality monitoring.

1. 3 PRODUCTS

A. Products: Means new material, components, equipment, fixtures, and systems forming the Work. Does not include machinery and equipment used for preparation, fabrication, conveying and erection of the Work. Products may also include existing materials or components required for reuse.

B. Do not use materials and equipment removed from existing premises, except as specifically permitted by the Contract Documents.

C. Provide interchangeable components of the same manufacturer for similar components.

1. 4 TRANSPORTATION AND HANDLING

A. Transport and handle products in accordance with manufacturer's instructions.

B. Promptly inspect shipments to assure that products comply with requirements, quantities are correct, and products are undamaged.

C. Provide equipment and personnel to handle products by methods to prevent soiling, disfigurement, or damage.

1. 5 STORAGE AND PROTECTION

A. Store and protect products in accordance with manufacturer's instructions, with seals and labels intact and legible. Store sensitive products in weather-tight, climate controlled enclosures.

B. For exterior storage of fabricated products, place on sloped supports, above ground.

C. Provide off-site storage and protection when site does not permit on-site storage or protection.

D. Cover products subject to deterioration with impervious sheet covering. Provide ventilation to avoid condensation.

E. Store loose granular materials on solid flat surfaces in a well-drained area. Avoid mixing with foreign matter.

F. Provide equipment and personnel to store products by methods to prevent soiling, disfigurement, or damage.

G. Arrange storage of products to permit access for inspection. Periodically inspect to assure products are undamaged and are maintained under specified conditions.

1. 6 PRODUCT OPTIONS

A. Products Specified by Reference Standards or by Description Only: Any product meeting those standards or description.

B. Products Specified by Naming One or More Manufacturers: Products of manufacturers named and meeting specifications, no options or substitutions allowed.

C. Products Specified by Naming One or More Manufacturers with a Provision for Substitutions: Submit a request for substitution for any manufacturer not named.

1. 7 SUBSTITUTIONS

A. Instructions to Bidders (IB) specify time for submitting requests for Substitutions after the Effective Date of the Agreement to requirements specified in this Section.

B. Substitutions may be considered when a product becomes unavailable through no fault of the Contractor.

C. Document each request with complete data substantiating compliance of proposed Substitution with Contract Documents.

D. A request constitutes a representation that the Contractor:
1. Has investigated proposed product and determined that it meets or exceeds the quality level of the specified product.
2. Will provide the same warranty for the Substitution as for the specified product.
3. Will coordinate installation and make changes to other Work, which may be required for the Work to be complete with no additional cost to Owner.
4. Waives claims for additional costs or time extension, which may subsequently become apparent.
5. Will reimburse Owner for review or redesign services associated with re-approval by authorities.

E. Substitutions will not be considered when they are indicated or implied on shop drawing or product data submittals, without separate written request, or when acceptance will require revision to the Contract Documents.

F. Substitution Submittal Procedure:

1. Submit three copies of request for Substitution for consideration. Limit each request to one proposed Substitution.
2. Submit shop drawings, product data, and certified test results attesting to the proposed product equivalence.
3. The Engineer will notify Contractor, in writing, of decision to accept or reject request.

END OF SECTION

SECTION 01700

CONTRACT CLOSEOUT

1. PART 1 GENERAL

1. 1 SECTION INCLUDES

A. Closeout procedures.

B. Punchlist procedures.

C. Final clean-up.

D. Project record documents.

E. Correction Period.

1. 2 RELATED SECTIONS

A. Section 01500 - Construction Facilities and Temporary Controls: Progress cleaning.

1. 3 CLOSEOUT PROCEDURES

A. Submit written certification that Contract Documents have been reviewed, Work has been inspected, and that Work is complete in accordance with Contract Documents and ready for Engineer's inspection.

B. Submit final Application for Payment identifying total adjusted Contract Sum, previous payments, and remaining sum due.

1. 4 PUNCHLIST PROCEDURES

A. Contractor shall notify Engineer when the work is substantially complete in accordance with Contract Documents.

B. Owner and Engineer will each appoint one Punchlist Representative who will conduct an inspection of the work and compile a list of items that are incomplete or do not comply with the requirements of the Contracts Documents. Contractor may accompany the inspection.

C. Contractor shall acknowledge that subsequent to the initial issuance of the punchlist, more items may be added to the list, which will be deemed amended, but only by the punchlist representatives.

D. Contractor shall proceed immediately to address the items on the list.

E. Contractor shall notify Engineer when listed items are completed and corrected.

F. Contractor shall make arrangements with the Owner and Punchlist Representative for final inspection and acceptance. Should items still be deficient, they will remain on the list until accepted by the Owner and Engineer.

G. Money will be retained under the Contract to cover items not accepted by the Owner and Engineer.

1. 5 FINAL CLEANING

A. Execute final clean-up prior to final inspection.

B. Clean storm sewer structures. Remove construction debris from all catch basins and manholes.

C. Clean site; sweep paved areas, rake clean landscaped surfaces.

D. Remove waste and surplus materials, rubbish, and construction facilities from the site.

E. Landscape areas as required in documents.

F. Restore roads, driveways, parking areas, lawns, drainage, and other items disturbed during construction to original condition or as required by the documents.

1. 6 PROJECT RECORD DOCUMENTS

A. Maintain on site, one set of the following record documents; record actual revisions to the Work:
1. Contract Drawings.
2. Specifications.
3. Addenda.
4. Change Orders and other Modifications to the Contract.
5. Reviewed shop drawings, and product data.

B. Store Record Documents separate from documents used for construction.

C. Record information concurrent with construction progress.

1. 7 CORRECTION PERIOD

A. For a period of one year from the date of Substantial Completion, promptly correct work that is found to be defective.

END OF SECTION

SECTION 02110

SITE CLEARING

1. PART 1 GENERAL

1.1 SECTION INCLUDES

A. Remove surface debris.

B. Sawcut and remove paving and curb and gutter.

C. Clear site of plant life and grass.

D. Remove existing storm sewer, drive culverts and catchbasins.

E. Topsoil excavation.

1.2 RELATED SECTIONS

A. Section 02211 - Rough Grading.

B. Section 02222 - Excavation.

C. Section 02923 - Landscape Grading.

1.3 UNIT PRICE – BASIS OF MEASUREMENT AND PAYMENT

A. Site Clearing and Debris Management:
1. Basis of Measurement: Included in the lump sum price bid as stated in the proposal.
2. Basis of Payment: Clearing site, loading and removing waste materials from site, removing and disposing of miscellaneous pavements, removing existing storm sewer and catch basins, drive culverts, sidewalks, foundations and block piers, removal and stock piling of fences, landscaping, removal of shrubbery, temporary removal of street and traffic signage, and removal and temporary relocation of mailboxes.

1.4 REGULATORY REQUIREMENTS

A. Conform to applicable code for disposal of debris.

B. Coordinate clearing Work with utility companies.

2. PART 2 EXECUTION

2.1 PREPARATION

A. Verify that existing plant life designated to remain, is tagged or identified.

2.2 PROTECTION

A. Locate, identify, and protect utilities that remain, from damage.

B. Protect survey stakes.

C. Protect trees, plant growth, and features designated to remain, as final landscaping.

D. All trees outside of the project limits shall be protected.

E. Protect bench marks and existing structures from damage or displacement.

F. Existing signs within limits of construction shall be removed and reinstalled in their original location. Coordinate this work with the Owner.

2.3 CLEARING

A. Clear areas required for access to site and execution of Work.

B. Sawcut and remove paving and curbs.

C. Remove existing storm sewer, drive culverts and catch basins as described on the drawings. Any structure or piping shown on the drawing to be affected by the proposed work is assumed to be removed completely.

D. Clear undergrowth and deadwood, without disturbing subsoil.

2.4 REMOVAL

A. Remove debris, rock, and extracted plant life from site.

B. This work shall be included in the cleanup of the project and as stated above.

2.5 TOPSOIL EXCAVATION

A. Excavate topsoil from areas to be further excavated, re-landscaped, and marked areas.

B. Stockpile in area designated on site as approved by the Engineer. Protect from erosion.

2.6 PREPARATION

A. Remove temporary patches where required.

B. Adjust manholes, catchbasins, valve boxes and monument boxes to proposed grade.

C. Sawcut to a minimum 12 inch depth on straight lines perpendicular to the roadway centerline or where indicated on the plans.

D. Where an existing pavement joint lies within road right of way limits and driveway slope is acceptable, remove pavement to that joint.

END OF SECTION

SECTION 02160

EXCAVATION SUPPORT SYSTEMS

1. PART 1 GENERAL

1. 1 WORK INCLUDES

A. Sheeting, Shoring, and Bracing.

1. 2 RELATED SECTIONS

A. Section 02225 - Trenching

1. 3 REGULATORY REQUIREMENTS

A. Conform to applicable OSHA regulations.

1. 4 REFERENCES

A. ASTM D-245-62T - Timber and lumber requirement.

B. ASTM A-328 - Standard Specifications for Sheet Piling.

C. ASTM A-572 - Grades 50, High Strength.

D. ASTM A-690 - High Strength, Corrosion Resistant.

1. 5 UNIT PRICE - MEASUREMENT AND PAYMENT

A. Excavation Support Systems:
1. Basis of Measurement: Included in the unit price bid for utility being installed.
2. Basis of Payment: Includes all excavation, installation, removal, and material in order to accomplish this work.

2. PART 2 PRODUCTS

2. 1 MATERIALS

A. Timber and lumber for shoring and bracing shall be new, merchantable pine, Douglas fir or spruce, unless otherwise shown or specified. Secondhand timber or lumber shall not be used where strength and/or appearance are important considerations.

B. Steel for sheeting, shoring, and bracing shall be as per the referenced ASTM specifications.

C. Temporary Sheeting: Select section modulus, embedment depth, and bracing required to complete the work.

3. PART 3 EXECUTION

3. 1 INSTALLATION

A. The Contractor is responsible for the design and location of all sheeting, shoring, and bracing.

B. Where required to properly support the surfaces of excavations and to protect the construction work and workmen, sheeting, bracing and shoring shall be provided.

C. Damage to new or existing structures occurring through settlements due to failure or lack of sheeting or bracing shall be repaired by the Contractor at his own expense.

D. Conflict of opinion as to whether the settlement is due to the work of the Contractor or to any other cause will be determined by the Engineer.

E. In general, the sheeting and bracing shall be removed, as the trench or excavation is refilled, in such a manner as to avoid the caving in of the work.

F. Fill voids left by the withdrawal of the sheeting by ramming, or otherwise as directed.

G. Obtain permission of the Engineer prior to the removal of any shoring, sheeting or bracing.

H. When sheeting and bracing is removed, the Contractor shall assume full responsibility for injury to structures or to other property or persons arising from failure to leave in place such sheeting or bracing.

I. For the purpose of preventing injury to the structures, or to other property or to persons, the Contractor shall leave in place any sheeting or bracing shown on the plans or ordered in writing by the Engineer.

J. Cutoff sheeting left in place at the elevation ordered but not be less than 18" below the final ground surface.

K. Bracing remaining in place shall be driven up tight.

L. Measurements and payment for sheeting and bracing ordered left in place will be made as extra work, unless noted otherwise.

M. The right of the Engineer to order sheeting and bracing left in place shall not be construed as creating any obligation on his part to issue such orders.

END OF SECTION

SECTION 02211

ROUGH GRADING

1. PART 1 GENERAL

1. 1 SECTION INCLUDES

A. Removal and stockpiling of topsoil and subsoil.

B. Cutting, grading and rough contouring the site.

1. 2 RELATED SECTIONS

A. Section 01400 - Quality Control: Testing fill compaction.

B. Section 02110 - Site Clearing.

C. Section 02222 - Excavation: Detention basin excavation.

D. Section 02223 - Backfilling: General backfilling.

E. Section 02225 - Trenching: Trenching and backfilling for utilities.

1. 3 REFERENCES

A. Test Method for Density of Soil in Place with loss by wash less than 15% - One Point Michigan Cone Test.

B. Test Methods for Density of Soil with loss by wash greater than 15% - One Point T-99 Test.

C. ASTM D2922 - Test Methods of Density of Soil and Soil-Aggregate in Place by Nuclear Methods (Shallow Depth).

1. 4 UNIT PRICE - MEASUREMENT AND PAYMENT

A. Rough Grading:
1. Basis of Measurement: Included in the lump sum price bid for cleanup and restoration.
2. Basis of Payment: Includes all excavation, embankment, fill, and grading required to provide the contours indicated on the drawings.

2. PART 2 PRODUCTS

2. 1 MATERIALS

A. Topsoil: Excavated material, graded, free of roots, rocks larger than 1 inch, subsoil, debris, and large weeds.

B. Subsoil: Excavated material, graded, free of lumps larger than 6 inches, and rocks larger than 3 inches and debris.

3. PART 3 EXECUTION

3. 1 EXAMINATION

A. Verify site conditions under provisions of Section 01039 - Coordination and Meetings.

B. Verify that survey benchmark and intended elevations for the Work are as indicated.

C. Verify that fill materials to be used are acceptable.

3. 2 PREPARATION

A. Identify required lines, levels, contours, and datum.

B. Identify known underground, above ground, and aerial utilities. Stake and flag locations.

C. Notify utility company to remove or relocate utilities if necessary.

D. Protect above and below grade utilities, which are to remain.

E. Protect plant life, lawns, and other features on adjacent properties.

F. Protect bench marks, adjacent fences, sidewalks, paving, and curbs from excavation equipment and vehicular traffic.

3. 3 TOPSOIL EXCAVATION

A. Excavate topsoil from entire site.

B. Stockpile in area designated on site or as approved by the Engineer. Remove excess topsoil not being reused, from the site.

C. Do not excavate wet topsoil.

D. Stockpile topsoil for reuse on site to depth not exceeding 8 feet. Cover to protect from erosion.

3. 4 SUBSOIL EXCAVATION

A. Excavate subsoil from areas to be further excavated, re-landscaped, or re-graded.

B. Stockpile in area designated on site or as approved by the Engineer. Level excess subsoil not being reused.

C. Do not excavate wet subsoil.

D. Stockpile subsoil to depth not exceeding 8 feet. Cover to protect from erosion.

3. 5 FILLING

A. Fill areas to contours and elevations with unfrozen materials.

B. Granular Fill: Place and machine compact materials in continuous layers not exceeding 9 inches compacted depth, compacted to 95 percent.

C. Subsoil Fill: Place and machine compact material in continuous layers not exceeding 9 inches compacted depth, compacted to 95 percent.

D. Maintain optimum moisture content of fill materials to attain required compaction density.

E. Slope grade away from buildings and structures minimum 2 inches in 10 ft, unless noted otherwise.

F. Make grade changes gradual. Blend slope into level areas.

G. Remove surplus and unsuitable fill materials from site.

3. 6 TOLERANCES

A. Top Surface of Subgrade: Plus or minus 1/10 foot.

3. 7 FIELD QUALITY CONTROL

A. Field inspection and testing will be performed under provisions of Section 01400.

B. Tests and analysis of fill material will be performed in accordance with One Point Michigan Cone Test, One Point T-99 Test, MDOT standard requirements and with Section 01400.

C. Compaction testing will be performed in accordance with MDOT standard requirements and with Section 01400.

D. If tests indicate Work does not meet specified requirements, remove Work, replace and retest at no cost to Owner.

E. Frequency of Tests: As directed by the Engineer.

END OF SECTION

SECTION 02222

EXCAVATION

1. PART 1 GENERAL

1.1 SECTION INCLUDES

A. Excavation for:
1. Storm Sewer
2. Manholes

B. Fugitive dust control plan.

1.2 RELATED SECTIONS

A. Document Section 1019 - Contract Considerations

B. Section 01400 - Quality Control.

C. Section 01500 - Construction Facilities and Temporary Controls: Dewatering excavations and water control.

D. Section 02211 - Rough Grading: Topsoil and subsoil removal from site surface.

E. Section 02223 - Backfilling.

F. Section 02225 - Trenching.

1.3 UNIT PRICE - BASIS OF MEASUREMENT AND PAYMENT

A. Excavation:
1. Basis of Measurement: Included in the unit price bid for utility being installed.
2. Basis of Payment: Includes all excavation, fill, labor, material, and equipment, sheeting, shoring, dewatering, grading to require contours, removal or leveling of spoils if necessary, disposal of existing utilities and fugitive dust control plan.

B. Spoil Leveling:
1. Basis of Measurement: Included in the unit price per lineal foot, as stated in the proposal.
2. Basis of Payment: Includes material, labor, and equipment to level spoils as indicated on drawings and specifications, removal of debris from leveled spoils in agricultural and wooded areas, and root raking of spoils in agricultural areas.

1.4 FIELD MEASUREMENTS

A. Verify that survey benchmark and intended elevations for the Work are as indicated.

2. PART 2 PRODUCTS

2.1 Not Used.

3. PART 3 EXECUTION

3.1 PREPARATION

A. Identify required lines, levels, contours, and datum.

B. Protect grade and slope stakes.

3.2 EXCAVATION

A. Underpin adjacent structures, which may be damaged by excavation work, including utilities and pipe chases.

B. Topsoil along entire length of project to be stockpiled and replaced in kind at end of construction. Landscape areas will require topsoil free of debris.

C. Grade top perimeter of excavation to prevent surface water from draining into excavation.

D. Provide, operate and maintain pumping equipment to keep excavation free of water.

E. Remove lumped subsoil, boulders, and rock.

F. Notify Owner's representative of unexpected subsurface conditions and discontinue affected Work in area until notified to resume work.

G. In areas that are suspect and may require subgrade undercutting, notify Owner's representative immediately. Do not proceed until it is agreed subgrade undercutting is required and quantities can be documented.

H. Machine slope banks according to OSHA guidelines.

I. Correct unauthorized excavation at no extra cost to Owner.

J. Correct areas over-excavated by error in accordance with Section 02223 - Backfilling.

3.3 FIELD QUALITY CONTROL

A. Field inspection will be performed under provisions of Section 01400 - Quality Control.

B. Provide for visual inspection of bearing surfaces.

3.4 PROTECTION

A. Protect excavations by methods required to prevent cave-in or loose soil from falling into excavation.

B. Protect landscaped area, mailboxes, trees, lawns, etc. Any changes to these areas become the responsibility of the contractor to correct at no cost to the Owner.

C. Protect paved areas and buried utilities by supporting trench walls if necessary during construction.

3.5 FUGITIVE DUST CONTROL PLAN

A. The Contractor is responsible for developing and implementing a fugitive dust control plan to prevent particulate from becoming airborne from human, wind, or machinery activity during construction.

B. The plan shall include but not be limited to the implementation of a combination of any or all of the following techniques as determined to be applicable to this project.
   1. Wet Suppression - How will water be applied? How often?
   2. Vehicle Speed Reduction - What will be the posted speed limit?
   3. Surface Cleaning - How will this be done?
   4. Traffic Control - Identify the main travel and haul roads.
   5. Windbreaks - What types if any will be used?

C. Good Operating Practices - Name some good operating practices.

D. The Contractor shall submit the plan to the Engineer at least thirty (30) days prior to start of construction.

END OF SECTION

SECTION 02223

BACKFILLING

1. PART 1 GENERAL

1. 1 SECTION INCLUDES.

A. Fill for utility trenches

B. Fill under roadways, driveways, sidewalks, parking lots, and other traveled surfaces.

C. Fill for over-excavation.

D. Fill for subgrade undercutting.

E. Consolidation and compaction.

1. 2 RELATED SECTIONS

A. Section 01400 - Quality Control: Testing Fill compaction.

B. Section 02222 - Excavation.

C. Section 02225 - Trenching: Backfilling of utility trenches.

D. Section 02660 - Water Distribution: Pipe bedding.

E. Section 02732 - Sanitary Sewerage System: Pipe bedding.

1. 3 UNIT PRICE - BASIS OF MEASUREMENT

A. Backfilling:
1. Basis of Measurement: Included in the unit price bid for utility being installed, structures, and restoration.
2. Basis of Payment: Includes all excavation, all backfill materials, filling, labor, material, and equipment required for backfill and compaction on this project.

1. 4 REFERENCES

A. ANSI/ASTM C117 - Test Method for Materials Finer than 75 mm (No. 200) Sieve in Mineral Aggregates by Washing.

B. ANSI/ASTM C136 - Method for Sieve Analysis of Fine and Coarse Aggregates.

C. MDOT 1996 Standard Specifications for Construction.

D. ASTM D2992 - Test Methods of Density of Soil and Soil - Aggregate in Place by the Nuclear Method (Shallow Depth).

1. 5 SUBMITTALS

A. Submit under provisions of Section 01300.

B. Samples: Submit 10 lb. sample of each type of fill to Engineer, in air-tight containers.

2. PART 2 PRODUCTS

2. 1 FILL MATERIALS

A. Type A - Coarse Stone Fill: MDOT 6A compacted crushed limestone - for wet excavation, pipe bedding, refill for poor soil or over excavation in pipe trench, compacted to 95 percent of maximum density. A ballast type crushed limestone free of shale, clay, friable material, sand debris graded in accordance with ANSI/ASTM C136.

B. Type B - Engineered Fill: MDOT Class II - for dry excavation, compacted to 95 percent of maximum density or MDOT Class IIIA – for PVC sanitary sewer pipe.

C. Type C - Acceptable Native Subsoil: Reused, free of gravel larger than 3 inch size, and debris, compacted to 95 percent of maximum density.

D. Type D - Dense Aggregate: MDOT 22A compacted crushed limestone - for access roads temporary patches on traveled surfaces and aggregate base course of asphalt pavement, shoulders, compacted to 95 percent of maximum density.

3. PART 3 EXECUTION

3. 1 EXAMINATION

A. Verify fill materials to be reused are acceptable.

3. 2 PREPARATION

A. Thoroughly proof-roll all areas of building pads, slabs-on-grade, bituminous pavement, concrete curb and gutter and sidewalks with a fully loaded tandem-axle truck, or its equivalent.

B. Loose or soft areas revealed during the proof-rolling operations are to be compacted or removed and replace with compacted Type B or C fill.

C. Install geotextile fabric between subgrade and aggregate in parking and drive areas as specified by the Engineer.

D. Prior to placement of fill material in building and paved areas, compact upper 12 inches of the subgrade to 95 percent of its maximum dry density as determined by MDOT Standard Requirements.

3. 3 BACKFILLING

A. Backfill areas to proposed subgrade with unfrozen materials.

B. Do not backfill over porous, wet, frozen or spongy subgrade surfaces.

C. Engineered Type B Fill: Place and compact materials in continuous layers not exceeding 9 inches compacted depth.

D. Acceptable Native Subsoil Type C Fill: Place and compact material in continuous layers not exceeding 9 inches compacted depth.

E. Employ a placement method that does not disturb or damage utilities in trenches.

F. Maintain optimum moisture content of backfill materials to attain required compaction density.

G. Backfill against supported foundation walls.

H. Make grade changes gradual. Blend slope into level areas.

I. Slope fill away from structures a minimum 2 inches in 10 feet.

J. Leave fill material stockpile areas completely free of excess fill materials.

3. 4 TOLERANCES

A. Top surface of fill for building pads plus or minus 1/4 inch from require elevation.

B. Top Surface of Backfilling under Paved Areas: Plus or minus 1/2 inch from required elevations.

3. 5 FIELD QUALITY CONTROL

A. Field inspection and testing will be performed under provisions of Section 01400 - Quality Control.

B. Tests and analysis of fill material will be performed in accordance with MDOT 1996 Standard Specifications for Construction and with Section 01400.

C. Compaction testing will be performed in accordance with MDOT 1996 Standard Specifications for Construction and with Section 01400.

D. If tests indicate Work does not meet specified requirements, remove Work, replace and retest at no cost to Owner.

E. Frequency of Tests: As directed by the Engineer.

3. 6 PROTECTION OF FINISHED WORK

A. Protect finished Work under provisions of Section 01500.

B. Recompact fills subjected to vehicular traffic.

3. 7 SCHEDULE

A. Fill Under Grass Areas:
1. Subsoil Type C fill, to 4 inches below finish grade, compacted to 95 percent maximum dry density as determined by MDOT Standard Requirements.

B. Backfill for Utility Trenches:
1. Bedding as specified in individual utility specification section.
2. Backfill material as specified in Section 02225 - Trenching and as defined here in for typed fill.

END OF SECTION

SECTION 02225

TRENCHING

1. PART 1 GENERAL

1. 1 SECTION INCLUDES

A. Excavate trenches for storm sewer, water main, sanitary sewer, force main, and their services to the line and grade shown on the drawings.

B. Trench backfilling and compaction.

1. 2 RELATED SECTIONS

A. Section 01400- Quality Control: Testing fill compaction.

B. Section 01500 - Construction Facilities and Temporary Controls: Water control in excavations.

C. Section 02160 - Excavation Support Systems: Temporary Sheeting.

D. Section 02211 - Rough Grading: Topsoil and subsoil removal from site surface.

E. Section 02223 - Backfilling: General backfilling.

F. Section 02660 - Water Distribution: Pipe bedding materials.

G. Section 02732 – Sanitary Sewer Systems: Pipe bedding materials.

1. 3 UNIT PRICE - BASIS OF MEASUREMENT

A. Trenching:
1. Basis of Measurement: Included in the unit price bid for utility being installation.
2. Basis of Payment: Includes all trenching, fill, labor, material, and equipment required for trenching on this project.

B. Railroad Track Removal and Restoration:
1. Basis of Measurement: At the lump sum bid price as stated in the proposal.
2. Basis of Payment: Includes all labor, material, and equipment to remove tracks prior to installation of proposed storm sewer as well as restoration of the tracks over the trench in accordance with detail as shown on the plans, and in accordance with Genesee and Wyoming Railroad specifications.

1. 4 REFERENCES

A. ANSI/ASTM C136 - Method for Sieve Analysis of Fine and Coarse Aggregates.

B. ASTM D2992 - Test Methods of Density of Soil and Soil-Aggregate in Place by the Nuclear Methods (Shallow Depth.).

C. ASTM C12 - Standard Practice for Installing Vitrified Clay Pipe Lines.

D. ASTM D2321 - Standard Practice for Underground Installation of Thermoplastic Gravity - Flow Applications.

1. 5 FIELD MEASUREMENTS

A. Verify that survey benchmark and intended elevations for the Work are as shown on Drawings.

2. PART 2 PRODUCTS

2. 1 BED MATERIALS

A. See individual utility specification section for bedding material and placement.

2. 2 FILL MATERIALS

A. Type A - Coarse Stone Fill: MDOT 6A compacted crushed limestone - for wet excavation, pipe bedding, and refill for poor soil or over excavation in pipe trench, compacted to 95 percent of maximum density. A ballast type crushed limestone free of shale, clay, friable material, and sand debris graded in accordance with ANSI/ASTM C136.

B. Type B - Engineered Fill: MDOT Class II - for dry excavation, compacted to 95 percent of maximum density or MDOT Class IIIA – for PVC sanitary sewer pipe.

C. Type C - Acceptable Native Subsoil: Reused, free of gravel larger than 3 inch size, and debris, compacted to 95 percent of maximum density.

D. Type D - Dense Aggregate: MDOT 22A compacted crushed limestone - for access roads temporary patches on traveled surfaces and aggregate base course of asphalt pavement compacted to 95 percent of maximum density.

3. PART 3 EXECUTION

3. 1 PREPARATION

A. Identify required lines, levels, contours, and datum.

B. Maintain and protect existing utilities remaining, which pass through work area.

C. Protect bench marks, grade and slope stakes.

3. 2 EXCAVATION

A. Excavate subsoil required for utility piping and accessories as indicated on the drawings.

B. Excavate on the required line to the depth required below the pipe grade for bedding thickness required.

C. Trenches for pipe shall be excavated to the following minimum of and maximum widths measured at the top of the pipe:

Pipe Size	Trench Width	
	Minimum	Maximum
6" and smaller	18"	24"

8" & 10"	24"	30"
12" & 15"	30"	36"
18"	34"	40"
21"	38"	42"
24"	42"	46"
27"	45"	49"
30"	49"	53"
36"	56"	60"
Larger than 36"	I.D. + 20"	I.D. + 24"

D. Where trench widths exceed the maximum specified above, the Owner's representative may require special bedding or the use of extra strength pipe at the Contractor's expense.

E. Minimum trench width is 18 inches.

F. Excavation shall not interfere with normal 45 degree bearing splay of foundations.

G. Hand trim excavation. Hand trim for bell and spigot pipe joints. Remove loose matter.

H. Remove lumped subsoil, boulders, and rock 6 inches below bottom of pipe.

I. Where soil in the bottom of the trench is unstable, excavate below the trench bottom and place Type A fill.

J. Correct unauthorized excavation at no cost to Owner.

K. Correct areas over-excavated by error with Type A fill, in accordance with Section 02223.

L. Stockpile excavated material in area designated on site and remove excess material not being reused from site.

M. Grade top perimeter of excavation to prevent surface water from draining into excavation.

N. Notify Owner's representative of unexpected subsurface conditions and discontinue affected work in area until notified to resume work.

O. Protect excavation by methods required to prevent cave-in or loose soil from falling into excavation.

P. Provide, operate, and maintain pumping equipment to keep trench free of water.

Q. Use trench boxes or other form of temporary protection when required by OSHA Standards or when protection of existing utilities is necessary.

3. 3 BEDDING

A. Support pipe and conduit during placement and compaction of bedding fill.

B. See individual utility specification sections for bedding material and placement.

3. 4 BACKFILLING

A. Backfill utility trenches under paved areas with Type B fill.

B. Backfill utility trenches under grass areas with Type C fill.

C. Systematically backfill to allow maximum time for natural settlement. Do not backfill over porous, wet, frozen or spongy subgrade surfaces.

D. Place geotextile fabric over Type A fill bedding prior to placing last lift of bedding.

E. Type B Fill: Place and compact materials in continuous layers not exceeding 9 inches to 95 percent of maximum dry density as determined by MDOT Standard Requirements. Fill to finish subgrade elevation.

F. Employ a compaction method for trench backfill that does not disturb or damage installed utilities and existing utilities in the trench. Compact backfill to specified density. If required compaction is not achieved and verified using mechanical methods, settling or spiking the trench with water may be used as a compaction method in conformance with ASTM C12 and D2321, as approved by the Engineer.

G. Maintain optimum moisture content of backfill materials to attain required compaction density.

H. Leave fill material stockpile areas completely free of excess fill materials.

I. Backfill simultaneously around all sides of structures, manholes and catch basins.

3. 5 TOLERANCES

A. Top Surface of Backfilling: Under Paved Areas: Plus or minus 1/2 inch from required elevations.

3. 6 FIELD QUALITY CONTROL

A. Field inspection and testing will be performed under provisions of Section 01400 - Quality Control.

B. Tests and analysis of fill material will be performed in accordance with MDOT Standard Requirements and with Section 01400 - Quality Control.

C. Compaction testing will be performed in accordance with MDOT Standard Requirements and with Section 01400 - Quality Control.

D. If tests indicate Work does not meet specified requirements, remove Work, replace and retest at no cost to Owner.

E. Frequency of Tests: As directed by the Engineer.

F. Proof roll compacted fill surfaces under paving.

3. 7 PROTECTION OF FINISHED WORK

A. Protect finished Work under provisions of Section 01500 - Temporary Controls.

B. Re-compact fills subjected to vehicular traffic prior to placing wearing surface.

END OF SECTION

SECTION 02274

SOIL EROSION PREVENTION AND SEDIMENTATION CONTROL

1. PART 1 GENERAL

1. 1 SECTION INCLUDES

A. System Description.

B. Quality Assurance.

C. Regulatory Requirements.

D. Method of Payment.

1. 2 SYSTEM DESCRIPTION

A. Methods of control are identified on Drawings by numbers corresponding to the Michigan Unified Keying System for soil erosion and sedimentation control.

B. The notation "T" or "P" following the number (as shown on the Drawings) indicates whether the control measure is temporary or permanent.

C. Additional control measures shall be employed as required by site conditions and applicable enforcing agency having project jurisdiction.

1. 3 UNIT PRICE – BASIS OF MEASUREMENT

A. Drop Inlet Protection:
1. Basis of Measurement: At the unit price bid per manhole/catch basin as stated in the proposal.
2. Basis of Payment: Includes all labor, material and equipment install and maintain drop inlet protection (silt sacs) or equal, for all proposed drainage structures. Maintenance includes regular cleaning of drop inlet protection until vegetation has been established, and removal when vegetation is established. Filter fabric placed under the grate of the proposed drainage structure **will not** be accepted as a means of drop inlet protection.

1. 4 QUALITY ASSURANCE

A. Perform and maintain work in accordance with the Soil Erosion and Sedimentation Control Act Part 91 of Act 451 of 1994, as amended, and corresponding rules of the Michigan Department of Environmental Quality.

1. 5 REGULATORY REQUIREMENTS

A. Owner will prepare application and obtain permit.

B. Submit installation time schedule for temporary and permanent soil erosion and sedimentation control measures to applicable enforcing agency having jurisdiction, as well as to Engineer. Make submittals prior to start of construction.

2. PART 2 PRODUCTS

2. 1 MATERIALS

A. Permanent Measures: In accordance with applicable Section for specified materials.

B. Temporary Measures: In accordance with standards and specifications for soil erosion and sediment control with approved plans and requirements of applicable enforcing agency.

3. PART 3 EXECUTION

3. 1 EXAMINATION AND PREPARATION

A. Identify required lines, levels, contours and datum.

B. Field locate known utility locations. Notify Engineer of conflicts and attain removal or relocation instructions prior to continuing installation activities.

C. Maintain and protect existing utilities to remain.

3. 2 PROTECTION OF ADJACENT WORK

A. Protect adjacent structures and property, which may be damaged by execution of work.

B. Protect existing trees, shrubs, landscaping and lawn areas designated to remain.

3. 3 INSTALLATION AND MAINTENANCE

A. Construct soil erosion and sedimentation control measures in accordance with approved plans and requirements of applicable enforcing agency.

B. Schedule planned control measures with construction operations to limit the area of any disturbed land to the shortest possible period of exposure.

C. Conduct all earth changes so as to effectively reduce accelerated soil erosion and resulting sedimentation.

D. Remove all sediment from runoff water before it leaves the site.

E. Inspect, maintain and repair temporary control measures until permanent control measures are implemented.

F. Maintain permanent control measures until final acceptance by Owner.

3. 4 SOIL EROSION PREVENTION AND SEDIMENTATION CONTROL MEASURES

A. Permanent and minimum temporary control measures as scheduled on Drawings.

B. Additional temporary measures (over and above those scheduled on Drawings) due to site grading/construction activities that in any way differ from that shown on Drawings.

END OF SECTION

SECTION 02279

FILTER FABRIC

1. PART 1 GENERAL

1. 1 SECTION INCLUDES

A. Filter fabric for groundwater infiltration - french drains, trench, pipe joint wrap, material separation, etc.

B. Filter fabric for grade protection.

1. 2 RELATED SECTIONS

A. Section 02732 - Sanitary Sewerage System

1. 3 REFERENCES

A. ASTM D-4632 - Test method for Tensile Strength and Elongation.

B. ASTM D-3787 - Test method for Mullen Burst.

C. ASTM D-4533 - Test method for Trapezoidal Tear Strength.

D. ASTM D-3787 - Test method for Puncture Strength.

E. ASTM D-4751 - Test method for Apparent Opening Size.

F. ASTM D-4491 - Test method for Coefficient of Permeability.

1. 4 UNIT PRICE - MEASUREMENT AND PAYMENT

A. Filter Fabric:
1. Basis of Measurement: Included in the unit bid price for storm sewer installation, structures, and other items.
2. Basis of Payment: Includes material, excavation, fill, pins, and all other work items to complete the installation.

2. PART 2 PRODUCTS

2. 1 MATERIALS

A. Mechanically-bonded, non-woven, long-chain polymetric fibers or yarns.
1. Filter fabric for groundwater infiltration (french drains, trench drains, pipe joint wrap, bag riprap headwalls, etc.) shall have, at minimum, the following properties:

Tensile Strength	100 lbs
Tensile Elongation (max)	100 %
Mullen Burst	210 psi
Trapezoidal Tear Strength	40 lbs
Puncture Strength	65 lbs
Apparent Opening Size (max)	0.210 mm
Coef. of Permeability	0.15 cm/sec

3. PART 3 EXECUTION

3. 1 EXAMINATION

A. Verify the correct fabric is specified for the specific use.

B. Beginning of installation means acceptance of existing conditions.

3. 2 PREPARATION

A. Remove large stones or other debris which could damage the filter fabric.

3. 3 STORAGE

A. All geotextile material shall be stored in a wrap that protects it from ultraviolet radiation and abrasion.

3. 4 INSTALLATION

A. Install according to manufacture's instructions.

B. All joints/overlaps in material shall be a minimum of 18 inches.

C. Repair damaged material by placing a piece of fabric that is sufficiently large to cover the damaged area plus 2 feet of adjacent undamaged geotextile in all directions.

D. Finish according to specific use requirements.

END OF SECTION

SECTION 02722

SITE STORM SEWERAGE SYSTEMS

1. PART 1 GENERAL

1. 1 SECTION INCLUDES

A. Site storm sewerage drainage piping, fittings, and accessories, and bedding.

B. Connection of storm water drainage system to site storm sewerage drainage.

C. Catch basins, manholes, catch basin / manholes, and paved area drainage.

D. Under drain.

1. 2 RELATED SECTIONS

A. Section 02110 – Site Clearing.
B. Section 02222 – Excavation.

1. 3 UNIT PRICE - BASIS OF MEASUREMENT

A. Pipe and Fittings:
1. Basis of Measurement: Included in the unit price bid per linear foot of storm sewer as stated in the proposal.
2. Basis of Payment: Includes all associated material, labor, equipment hand trimming; excavation; dewatering; removal of existing pipe and structures, fill material; bedding; pipe, fittings, necessary extensions; bulkheading of abandoned sewers; protection of buried lines and cables; protection of gas mains; granular cover; filter fabric; ties to existing tiles, tees, branch connections, removal of shrubs and trees, temporary relocation, and replacement of mailboxes and street signs etc., as necessary for construction and accessories as stated in the specifications and indicated on the drawings, for a complete installation.

B. Catch Basins, Manholes and Tees:
1. Basis of Measurement: Unit price bid per each, as stated in the proposal.
2. Basis of Payment: Includes all associated material, labor, equipment, hand trimming, excavation, fill material, dewatering, bedding, foundation pad, unit installation with accessories, riser pipe for inlet tees, branch connections and existing tile extensions, shop drawings, catch basins and manholes and tees complete as shown on the plans and as stated in the specifications. Also includes removal of existing storm sewer and drainage structures.

C. Catch Basin and Manhole Castings, Grates, and Adjustments:
1. Basis of Measurement: At the unit price bid per each for manholes, catch basins, or inlet tees as stated in the proposal.
2. Basis of Payment: Includes all associated labor, equipment, materials, cleaning and dampening the structure, adjusting to fit finished grade, the non-shrink mortar and fabric wrap for a complete installation. Payment for the catch basin castings shall not be made until final grading is complete and positive drainage is achieved. All covers and grates must be cast with “Dump No Waste; Drains to Waterways.”

D. Lateral Tile Connections:

1. Basis of Measurement: At the unit price bid per each, as stated in the proposal.
2. Basis of Payment: Includes all associated labor, material and equipment, pipe and fittings investigate and reconnect all existing tiles, sump leads, services leads, etc., for the project whether shown on the plans or located in the field for a complete installation for the project.

E. Connect Existing Storm Sewer:

1. Basis of Measurement: At the unit price bid for proposed storm sewer as stated in the proposal.
2. Basis of Payment: Includes all labor, equipment, excavation, bedding, bulkheading, brick, mortar, filter fabric, pipe and backfill to connect the existing storm sewer to the proposed drainage structure, as indicated on the plans and as stated in the proposal.

F. Precast Concrete Headwall (36" Pipe):

1. Basis of Measurement: At the unit price bid, as stated in the proposal.
2. Basis of Payment: Includes all labor, equipment, and material to furnish and install a precast headwall on the proposed storm sewer that conforms to MDOT Standard specifications and details. Also includes backfill and grading of open drain receiving the storm water flow as shown on plans.

G. Ditch Inlets:

1. Basis of Measurement: At the unit price bid for each as stated in the proposal.
2. Basis of Payment: Includes all labor, equipment, and material to construct the side ditch inlet as shown on the plans. Includes 10 lineal feet of CMP pipe as specified. Connection to proposed manhole/catch basin, excavation, backfilling, and grading as shown on plans.

1. 4 REFERENCES

A. ANSI/ASTM C76 - Reinforced Concrete Culvert, Storm Drain, and Sewer Pipe.

B. ANSI/ASTM C507 – Reinforced Concrete Elliptical Culvert, Storm Drain, and Sewer Pipe.

C. ANSI/ASTM C443 – Joints for Circular Concrete Sewer and Culvert Pipe, Using Rubber Gaskets.

D. ANSI/ASTM C478 - Precast Reinforced Concrete Manhole Sections.

E. ANSI/ASTM D2729 – Poly (Vinyl Chloride) (PVC) Sewer Pipe and Fittings.

F. ASTM F2881 - Polypropylene (PP) Dual Wall Pipe and Fittings

G. ASTM D2922 - Test Methods for Density of Soil and Soil-Aggregate in Place by Nuclear Methods (Shallow Depth).

H. ASTM D3017 - Test Methods for Moisture Content of Soil and Soil-Aggregate Mixtures.

I. MDOT Standard Specifications for Construction - 1990 Edition.

1. 5 DEFINITIONS

A. Bedding: Fill placed under, beside and directly over pipe, prior to subsequent backfill operations.

1. 6 SUBMITTALS

A. Submit under provisions of Section 01300 - Submittals.

B. Product Data: Provide data indicating pipe, pipe accessories, and sock.

C. Manufacturer's Installation Instructions: Indicate special procedures required to install Products specified.

D. Submit shop drawings for each structure 4’ diameter and larger.

1. 7 PROJECT RECORD DOCUMENTS

A. Submit under provisions of Section 01700 - Contract Closeout.

B. Accurately record actual locations of pipe runs, connections, catch basins, Cleanouts, and invert elevations.

C. Identify and describe unexpected variations to subsoil conditions or discovery of uncharted utilities.

1. 8 REGULATORY REQUIREMENTS

A. Conform to applicable code for materials and installation of the Work of this Section.

B. Conform to applicable standards for pipe and fitting identification markings.

1. 9 FIELD MEASUREMENTS

A. Verify that field measurements and elevations are as indicated.

1. 10 COORDINATION

A. Coordinate work under provisions of Section 01039 - Coordination and Meetings.

2. PART 2 PRODUCTS

2. 1 SEWER PIPE MATERIALS

A. ASTM C-76 IV or V (at railroad crossing) Reinforced Concrete pipe nominal sizes 30"-12" plain joint for services and catch basin leads and bitumastic type joint compound as manufactured by Allied Products Company in the top two-thirds of the joint and wrapped with filter fabric (see section -2279 - Filter Fabric) for main line. Premium joints (ASTM – C443) shall be used at railroad crossing.

B. ASTM F2881 / AASHTO M330 Polypropylene (H.P. Storm) pipe 15” through 36” pipe shall have a smooth interior with annular exterior corrugations. Polypropylene pipe shall be joined with a gasketed integral bell & spigot joint and shall be watertight according to the requirements of ASTM D3212 unless otherwise indicated on the plans.

C. Polyethylene Tubing: ASTM D-2239, flexible type, 2” in diameter for sump pump lead extensions.

D. Corrugated Metal Pipe: Size, corrugations, and gauge as indicated on plans.

2. 2 PIPE ACCESSORIES

A. Fittings: Same material as pipe, molded and formed to suit pipe size and end design, in required tee, bends, elbows, cleanouts, reducers, traps and other configurations required.

B. Filter Fabric: As specified in Section 02279 - Filter Fabric.

C. Couplings: Flexible, elastomeric plastic sleeve with stainless steel clamps and bands, for connecting proposed and existing services. As manufactured by Fernco Joint Sealer Co. or equal.

D. Plugs: Furnished by the pipe manufacturer for the specific use with that pipe as approved by the Engineer.

E. Concrete Collars: Class A concrete, 6 inches thick and 12 inches minimum on either side of the joint with 6" wide strip of filter fabric around joint. Use to join different types of pipe when a Fernco type or other manufactured coupling will not work.

2. 3 MANHOLES, CATCH BASINS AND ACCESSORIES

A. Barrel and conical top and flat top sections. (Nominal Diameters of 3' to 8')
1. Reinforced, precast concrete pipe section conforming to ASTM C-478.
2. Nominal diameter as indicated on the drawings.
3. Precast reinforced concrete base as indicated as drawing and approved by Engineer.
4. Tongue and groove joints sealed with rubber gaskets.

2. 4 MANHOLE AND CATCH BASIN COVERS AND FRAMES

A. Manholes and Catch Basins - Castings as indicated on Drawings. All covers, inlets, grates must be cast with “Dump No Waste; Drains to Waterways.”

2. 5 FILL MATERIAL

A. Schedule of Bedding Materials:
1. All bedding is to be compacted to 95% of its maximum density - see drawings for bedding type.

B. Cover Materials:
1. The sides of all pipe shall be backfilled with MDOT Class II A fill to 12" above the pipe. Compact in 9" lifts to 95% of it maximum density unless otherwise indicated on the plans.
2. All areas to be landscaped seeded shall be backfilled with native material compacted to 95% from 12" above the top of pipe. All other areas are to complete sand backfill, or as indicated on the plans.

3. PART 3 EXECUTION

3. 1 EXAMINATION

A. Verify that trench cut excavation base is ready to receive work and excavations, dimensions, and elevations are as indicated on layout drawings.

3. 2 PREPARATION

A. Hand trim excavations to required elevations. Correct over excavation with fill material specified in Section 02223 – Backfilling and 02275 - Trenching.

B. Remove large stones or other hard matter, which could damage piping or impede consistent backfilling or compaction.

C. Cut out soft areas of subgrade not capable of compaction. Backfill with MDOT 6A Stone and compact to density equal to or greater than requirements for support of pipe or structure and subsequent backfill material.

D. Excavate pipe trench in accordance with Section 02222 - Excavation for work of this section. Hand trim excavation for accurate placement of pipe to elevations indicated, allowing for bedding thickness.

3. 3 BEDDING

A. Place bedding material at trench bottom, level materials in continuous layer not exceeding 6 inches compacted depth.

B. Maintain optimum moisture content of bedding material to attain required compaction density.

C. Dig out for pipe bells.

3. 4 INSTALLATION - PIPE

A. Install pipe, fittings, and accessories in accordance with ASTM Standards and manufacturer's instructions.

B. Place pipe on specified bedding.

C. Lay pipe to slope gradients noted on layout drawings by the use of a laser beam alignment method proven reliable and operated by competent, experienced personnel.

D. Place remainder of bedding as specified. Do not displace or damage pipe when compacting.

E. Install and compact backfill according to Section 02223 - Backfilling. Do not displace or damage pipe when compacting.

F. Contractor shall use appropriate measures, approved by the engineer to provide a sealed connection between the storm sewer and appurtenances.

G. Place bitumastic joint compound in the top 2/3 of concrete pipe. Leave bottom 1/3 open.

H. Wrap joints of concrete pipe with a 24" wide strip of filter fabric overlapping ends 12-inch minimum. Secure with tape.

3. 5 INSTALLATION - MANHOLES, CATCH BASINS AND CLEANOUTS

A. Install according to manufacturer's instructions.

B. Form bottom of excavation clean and smooth to correct elevation.

C. Place precast concrete base pad, tee sections, and sections with integral bottoms on 6 inches of Type D (MDOT 6A) compacted stone bedding.

D. Level top surface of base pad or tee section to receive concrete shaft sections.

E. Establish elevations and pipe inverts for inlets and outlets as indicated.

F. Mount lid and frame level in grout, secured to top cone section or flat top to elevation indicated.

G. Grout all joints between base pad, pipe connections, and top.

H. Install barrel sections, cone section, and frame and cover to elevation indicated.

I. Maximum height from top of cone to bottom of frame shall be 12 inches.

J. Install stubs and branch connections at locations and elevations. Close ends with approved plug.

K. Bed stubs and branch connections as indicated on the plans.

3. 6 REMOVAL - EXISTING CATCH BASINS AND MANHOLES

A. Remove existing structures complete at the locations indicated on the drawings.

B. Maintain continuous service in live lines.

C. Reconnect lines scheduled to remain in service, as indicated on the drawings.

3. 7 SEWER SERVICES

A. Locate existing sewer services along the limits of the Project.

B. Determine active/inactive status of services.

C. Maintain active services for uninterrupted use.

D. Connect active services to proposed sewer, as it is installed, with approved pipe and approved coupling for uninterrupted use as shown on the drawings.

E. Provide couplings, adapters, and pipe for a complete connection.

F. Plug proposed service leads that are not connected to an existing service. Plug shall be supplied by the pipe manufacturer and/or approved by the Engineer.

G. Plug inactive services with a concrete bulkhead at the proposed sewer trench after inspection and approval by the Engineer.

3. 8 FIELD QUALITY CONTROL

A. Field inspection and testing will be performed under provisions of Section 01400 - Quality Control.

B. Request inspection prior to and immediately after placing aggregate cover over pipe.

3. 9 PROTECTION

A. Protect finished work under provisions of Section 01500 - Construction Facilities and Temporary Controls.

B. Protect pipe and aggregate cover from damage or displacement until backfilling operation is in progress.

END OF SECTION

SECTION 02923

LANDSCAPE GRADING

1. PART 1 GENERAL

1. 1 WORK INCLUDED

A. Finish grade subsoil and proof roll.

B. Place, level, and compact topsoil.

1. 2 RELATED WORK

A. Section 01400 - Quality Control: Compaction requirements of backfill.

B. Section 02211 - Rough Grading.

C. Section 02223 - Backfilling.

D. Section 02936 - Seeding: Finish ground cover.

1. 3 SAMPLES

A. Submit samples under provisions of Section 01400 - Quality Control.

B. Submit 10 lb sample of imported fill to testing laboratory, in air-tight containers.

C. Disregard sample submission if recent test results are available for type of fill.

1. 4 PROTECTION

A. Protect landscaping and other features remaining as final work.

B. Protect existing structures, fences, roads, sidewalks, paving, mailboxes, and curbs.

1. 5 UNIT PRICE - MEASUREMENT AND PAYMENT

A. Landscape Grading:
1. Basis of Measurement: Included in the unit price bid for cleanup and restoration.
2. Basis of Payment: Includes all labor, excavation, fill for landscape grading and grading necessary to obtain the required contours and replacement of necessary mail boxes, and other landscaping necessary to return work area to preconstruction conditions.

2. PART 2 PRODUCTS

2. 1 MATERIALS

A. Topsoil: Min. 4" compacted depth.

B. Topsoil: Imported, friable loam; free of subsoil, roots, grass, excessive amount of weeds, stone, and foreign matter; acidity range (pH) of 5.5 to 7.5; containing a minimum of 4 percent and a maximum of 25 percent organic matter.

C. Submit lab results or samples for testing as requested by the Owner or Engineer if imported topsoil is used.

3. PART 3 EXECUTION

3. 1 INSPECTION

A. Verify site conditions and note irregularities affecting work of this Section.

B. Beginning work of this Section means acceptance of existing conditions.

3. 2 SUBSOIL PREPARATION

A. Eliminate uneven areas and low spots. Remove debris, roots, branches, stones, in excess of 1/2 inch in size. Remove subsoil contaminated with petroleum products.

B. Scarify subgrade to depth of 4 inches where topsoil is scheduled. Scarify in areas where equipment used for hauling and spreading topsoil has compacted subsoil.

3. 3 PLACING TOPSOIL

A. Place topsoil to a minimum 4-inch compacted depth in areas where seeding, sodding and planting is scheduled.

B. Use topsoil in relatively dry state. Place during dry weather.

C. Fine grade topsoil eliminating rough or low areas. Maintain levels, profiles, and contours of subgrade.

D. Remove stone, roots, grass, weeds, debris, and foreign material while spreading.

E. Manually spread topsoil around trees and plants to prevent damage.

F. Lightly compact. Roll placed topsoil.

G. Remove surplus subsoil and topsoil from site.

H. Leave stockpile area and site clean and raked, ready to receive landscaping.

I. Place required trees, shrubs, fences, and mail boxes in their proper locations.

3. 4 TOLERANCES

A. Top of Topsoil: Plus or minus 1/2 inch.

END OF SECTION

SECTION 02936

SEEDING

1. PART 1 GENERAL

1. 1 SECTION INCLUDES

A. Preparation of subsoil.

B. Placing topsoil.

C. Hydro-seeding, mulching and fertilizer.

D. Maintenance.

E. Landscape Seeding.

1. 2 RELATED SECTIONS

A. Section 02110 - Site Clearing.

B. Section 02211 - Rough Grading.

C. Section 02222 - Excavation.

D. Section 02923 - Landscape Grading: Preparation of subsoil and placement of topsoil in preparation for the work of this section.

1. 3 LUMP SUM - MEASUREMENT AND PAYMENT

A. Seeding, Fertilizing, and Mulching:
1. Basis of Measurement: Included in the lump sum price bid as stated in the proposal.
2. Basis of Payment: Includes all excavation, labor, materials, fertilizer, mulch, landscape grading, topsoil, subsoil, seeding, watering and maintenance to provide for uniform grass growth and any re-seeding and erosion repair to provide for a uniform grass growth at the completion of the project.

1. 4 REFERENCES

A. FS 0-F-241 - Fertilizers, Mixed, Commercial.

1. 5 DEFINITIONS

A. Weeds: Include Dandelion, Jimsonweed, Quackgrass, Horsetail, Morning Glory, Rush Grass, Mustard, Lambsquarter, Chickweed, Cress, Crabgrass, Canadian Thistle, Nutgrass, Poison Oak, Blackberry, Tansy Ragwort, Bermuda Grass, Johnson Grass, Poison Ivy, Nut Sedge, Nimble Will, Bindweed, Bent Grass, Wild Garlic, Perennial Sorrel, and Brome Grass.

1. 6 MAINTENANCE DATA

A. Submit under provisions of Section 01700 - Contract Closeout.

1. 7 QUALITY ASSURANCE

A. Provide seed mixture in containers showing percentage of seed mix, year of production, net weight, date of packaging, and location of packaging.

B. Provide signed affidavit stating the amount and type of seed, fertilizer, and mulch applied per acre.

1. 8 REGULATORY REQUIREMENTS

A. Comply with regulatory agencies for fertilizer and herbicide composition.

1. 9 DELIVERY, STORAGE, AND HANDLING

A. Deliver, store, protect and handle products to site under provisions of Section 01600.

B. Deliver grass seed mixture in sealed containers. Seed in damaged packaging is not acceptable.

C. Deliver fertilizer in waterproof bags showing weight, chemical analysis, and name of manufacturer.

1. 10 COORDINATION

A. Coordinate work under provisions of Section 01039

1. 11 MAINTENANCE SERVICE

A. Maintain seeded areas immediately after placement until grass is well established and exhibits a vigorous growing condition and is accepted by Owner. Guarantee replacement of dead material for one year following acceptance.

2. PART 2 PRODUCTS

2. 1 SEED MIXTURE

A. Seed Mixture
1. Kentucky Blue Grass: 30 percent.
2. Creeping Red Fesce Grass: 40 percent.
3. Perennial Rye Grass (Manhattan): 30 percent.

2. 2 SOIL MATERIALS

A. Topsoil: Fertile, agricultural soil, typical for locality, capable of sustaining vigorous plant growth, taken from drained site; free of subsoil, clay or impurities, plants, weeds and roots; pH value of minimum 5.5 and maximum 7.5.

2. 3 ACCESSORIES

A. Mulching Material: Conwed Verdoyl #2000.

B. Fertilizer: FS O-F-241, Commercial Grade A with 12-12-12 analysis.

C. Water: Clean, fresh and free of substances or matter which could inhibit vigorous growth of grass.

3. PART 3 EXECUTION

3. 1 EXAMINATION

A. Landscape Seeding - Verify that prepared soil base is ready to receive the work of this section. See Section 02923 – Landscape Grading.

3. 2 PREPARATION OF SUBSOIL

A. Prepare sub-soil to eliminate uneven areas and low spots. Maintain lines, levels, profiles and contours. Make changes in grade gradual. Blend slopes into level areas.

B. Remove foreign materials, weeds and undesirable plants and their roots. Remove contaminated sub-soil.

C. Scarify subsoil to a depth of 4 inches where topsoil is to be placed. Repeat cultivation in areas where equipment, used for hauling and spreading topsoil, has compacted sub-soil.

3. 3 PLACING TOPSOIL

A. In accordance with Section 02923 - Landscaping Grading.

3. 4 FERTILIZING

A. Apply fertilizer at a minimum rate of 500 lbs. per acre. Verify if a phosphorus fertilizer ban or limit is in place and plan accordingly.

B. Apply after smooth raking of topsoil and prior to roller compaction.

C. Do not apply fertilizer at same time or with same machine as will be used to apply seed.

D. Mix thoroughly into upper 2 inches of topsoil.

E. Lightly water to aid the dissipation of fertilizer.

3. 5 QUALITY CONTROL

A. Notify Engineer 72 hours prior to hydro-seeding and fertilizing for approval to proceed.

3. 6 MAINTENANCE

A. Immediately reseed areas, which show bare spots.

B. Repair any eroded areas and reseed immediately.

C. Contractor shall guarantee a uniform grass growth over the entire project and shall reseed bare and thin areas until this is accomplished at no additional cost to the project.

END OF SECTION

SECTION 03001

CONCRETE

1. PART 1 GENERAL

1. 1 WORK INCLUDED

A. Formwork, shoring, bracing, and anchorage.

B. Concrete reinforcement and accessories.

C. Cast-in-place concrete.

D. Non-shrink grout.

1. 2 RELATED WORK

A. Section 02520 - Portland Cement Concrete Paving.

B. Section 02522 - Concrete Sidewalks

C. Section 02575 - Pavement Repair.

D. Section 02722 - Site Storm Sewerage Systems.

E. Section 2732 - Sanitary Sewerage Systems.

1. 3 REFERENCES

A. ACI 301 - Specifications of Structural Concrete for Buildings.

B. ANSI/ASTM A185 - Welded Steel Wire Fabric for Concrete Reinforcement.

C. ANSI/ASTM A497 - Welded Deformed Steel Wire Fabric for Concrete Reinforcement.

D. ASTM A615 - Deformed and Plain Billet-Steel for Concrete Reinforcement.

E. ASTM C33 - Concrete Aggregates.

F. ASTM C94 - Ready-Mixed Concrete.

G. ASTM C150 - Portland Cement.

H. ASTM C260 - Air Entraining Admixtures for Concrete.

I. ASTM C309 - Liquid Membrane-Forming Compounds for Curing Concrete.

J. ASTM D2103 - Polyethylene Film and Sheeting.

K. FS TT-C-800 - Curing Compound, Concrete, for New and Existing Surfaces.

L. MDOT Standard Specifications for Construction - Current Edition.

1. 4 UNIT PRICE – MEASUREMENT AND PAYMENT

A. Concrete:
1. Basis of Measurement: Included in the unit price bid for other pay items requiring concrete.
2. Basis of Payment: Includes all materials, excavation, equipment, and labor required for concrete placement on this project, complete as specified in contract documents and as shown in plans.

1. 5 QUALITY ASSURANCE

A. Perform work in accordance with MDOT Standard Specifications for Construction.

1. 6 TESTS

A. Testing and analysis of concrete will be performed under provisions of Section 01400 - Quality Control.

B. Testing firm will take cylinders and perform slump [and air entrainment] tests in accordance with MDOT Standards.

C. Three concrete test cylinders will be taken for every 100 or less cu yds of each class of concrete placed each day.

D. One additional test cylinder will be taken during cold weather and be cured on site under same conditions as concrete it represents.

E. One slump test will be taken for each set of test cylinders taken.

2. PART 2 PRODUCTS

2. 1 FORM MATERIALS

A. Conform to ACI 301 and MDOT Standards.

B. Plywood Forms: 5 Ply Douglas Fir species; solid one side grade; sound undamaged sheets.

C. Lumber: Pine species; No.2 grade; with grade stamp clearly visible.

D. Steel Forms: Smooth, true and undamaged stiffened to support weight of concrete with minimum deflection.

E. Glass Fiber Reinforced Resin Type: Preformed shape, stiffened to support weight of concrete with minimum deflection.

F. Tubular Column Type: Round, spirally wound laminated fiber material; inside surface treated with release agent.

G. Form Ties: Snap-off metal, of fixed length.

2. 2 REINFORCING STEEL

A. Reinforcing Steel: ASTM A615, 60 ksi yield grade billet steel deformed bars; uncoated finish.

B. Welded Steel Wire Fabric: Plain type, ANSI/ASTM A185; in flat sheets; coiled rolls; uncoated finish.

2. 3 CONCRETE MATERIALS

A. Cement: ASTM C150, Normal - Type I, moderate - Type II Portland, with air entraining admixture, grey color.

B. Fine Aggregates: ASTM C33 and MDOT 2NS.

C. Coarse Aggregates: ASTM C33 and MDOT 6AA.

D. Water: Clean and not detrimental to concrete.

2. 4 ADMIXTURES.

A. Fiber Reinforcement: 1/2 inch polypropylene fibers by Fibermesh Company or Equal.

B. Air Entrainment: ASTM C260; manufactured by W.R. Grace and Company or Axim Concrete Technologies.

C. Chemical: ASTM C494, Type A – Water Reducing admixture; manufactured by W.R. Grace and Company or Axim Concrete Technologies.

D. Fly Ash: ASTM C618.

E. Chloride based admixtures are prohibited in all reinforced concrete.

2. 5 ACCESSORIES

A. Bonding Agent: Two component modified epoxy resin; Sikadur 32 Hi-Mod manufactured by Sika Corp; concressive 1001 LPL, 3007 manufactured by Structural Bonding Company or equal.

B. Non-Shrink Grout: Premixed compound with non-metallic aggregate, cement, water reducing and plasticizing agents; capable of minimum compressive strength of 2400 psi in 2 days and 7,000 psi in 28 days. Five Star Grout as manufactured by U.S. Grout Co., or equal.

C. Epoxy Adhesive: Two components epoxy resin adhesive; Sikadur 35, Hi-Mod LV manufactured by Sika Corporation, Glendale Hts., IL (708) 924-7900.

D. Adhesive Anchors: Hilti HVA adhesive anchoring system. Hilti adhesive anchors shall be comprised on an HEA capsule with an ASTM A193, Grade B&, HAS stainless steel rod assembly with stainless steel ASTM F594 nuts and ANSI B 18.221 (1965), Type A, plain washers under the turned element. Install per manufacture's specifications.

E. Construction Joints: ANSI/ASTM D1751 type; ¼ inch to 1 inch thick, manufactured by A.C.D. International or equal.

F. Form Release Agent: Colorless material, which will not stain concrete, absorb moisture or impair natural bonding or color characteristics of coating intended for use on concrete; manufactured by W.R. Meadows, or equal.

2. 6 CURING MATERIALS

A. Water: Clean and drinkable.

B. Absorptive Mat: ASTM C171, cotton fabric or burlap-polyethylene 8 oz/sq yd, bonded to prevent separation during use.

C. Membrane Curing Compound: ASTM C309, Type 1, Class B, liquid acrylate type, clear for interior or exterior use in areas that may receive subsequent finishes manufactured by Sonneborn Building Products, W.R. Meadows, or equal.

D. Membrane Curing Compound: ASTM C309, Type 2, Class B, white pigmented finish for exterior use, manufactured by W.R. Meadows or equal.

2. 7 CONCRETE HARDENER

A. Colorless, sprayable, fluo-silicate base solution.

B. Product: Lapidolith, as manufactured by Sonneborn Chemical and Refining Corporation, or equal.

2. 8 CONCRETE MIX

A. Mix concrete in accordance with ASTM C94.

B. Comprehensive Strength:

CONCRETE MIX	COMPREHENSIVE STRENGTH		
Class A	7 Days 2600 psi	28 Days 4000 psi	Slump 2 – 4 inch
Class B	7 Days 2500 psi	28 Days 3500 psi	Slump 5 – 2 inch
Class C	7 Days 1950 psi	28 Days 3000 psi	Slump 6 – 3 inch

C. All concrete exposed to weathering shall be air entrained with 3.5% to 6.5% total air content by volume.

D. Use MDOT approved admixtures.

3. PART 3 EXECUTION

3. 1 FORMWORK ERECTION

A. Verify lines, levels, and measurement before proceeding with form work.

B. Hand trim sides and bottom of earth forms; remove loose dirt.

C. Align form joints.

D. Do not apply form release agent where concrete surfaces receive special finishes or applied coatings, which may be affected by agent.

E. Coordinate work of other Sections in forming and setting openings, slots, recesses, chases, sleeves, bolts, anchors, and other inserts.

F. Install chamfered wood strips at all exposed corners unless stated otherwise.

G. Install and secure form work prior to placing concrete.

3. 2 REINFORCEMENT

A. Place, support, and secure reinforcement against displacement.

B. Locate reinforcing splices at locations indicated on the shop drawings.

C. Notify Engineer one working day prior to placing concrete to check reinforcement.

3. 3 PLACING CONCRETE

A. Place concrete in accordance with MDOT Standard Specifications for Construction.

B. Notify Engineer one working day prior to concrete placement.

C. Ensure reinforcement, inserts, embedded parts, formed joint fillers, joint devices and accessories are not disturbed.

D. Place concrete continuously between predetermined expansion, control and construction joints.

E. Do not interrupt successive placement; do not permit cold joints to occur.

F. Thoroughly compact concrete immediately after placing by means of mechanical vibrators or other suitable tools approved by the Engineer.

G. Concrete transported in a truck mixer, agitator or other transportation device shall be discharged at the job within 1 1/2 hours after the cement has been added to the water or aggregates.

H. When hand mixing is authorized, it shall be done on a watertight platform and in such a manner as to ensure a uniform distribution of the materials throughout the mass. Mixing shall continue until a homogeneous mixture of the required consistency is obtained.

I. Retempering of partially hardened concrete or mortar will not be permitted.

J. Saw-cut joints within 24 hours after placing concrete, using 3/16 inch thick blade cut into 1/4 depth of slab thickness.

3. 4 EXISTING WORK

A. Where new concrete is doweled to existing work, drill holes in existing concrete, insert steel dowels and pack with non-shrinking grout.

B. Prepare previously placed concrete by cleaning with steel brush and apply bonding agent in accordance with manufacturer's instructions.

3. 5 CONCRETE FINISHING

A. Formed Surfaces.

1. As a minimum, all formed surfaces shall receive a plain finish and a rubbed finish.
2. Plain Finish: Immediately after removal of forms, all fins and loose material shall be removed and all holes, voids, aggregate pockets and depressions shall be cut out to solid concrete. All such defective areas shall be cleaned and wetted thoroughly and immediately be brushed with neat cement and filled with Portland Cement grout finished, flush with the adjacent surfaces. Patch work shall be damp cured for a period of 48 hours and, when exposed, it shall be finished to match adjacent surfaces.
3. Rubbed Finish: All form marks and other such irregularities shall be removed by rubbing the surface with a Carborundum stone and water as soon as practical after form removal.
4. Bagged Finish: All formed surfaces which are not earth backfilled shall receive a bagged finish. All air and water voids shall be finished flush with the wall surface. The wall shall first be moistened with water. Portland cement grout matching the color of the base concrete shall be worked into the voids using burlap or sponge rubber finishing pads.

B. Unformed Surface Finishes

1. Troweled Finish: After a floated finish, provide a smooth surface, free of defects with a steel trowel. Follow the first troweling with a second troweling after the concrete has hardened sufficiently to produce a ringing sound as the trowel is moved over the surface. The finish surface shall be essentially free of trowel marks, uniform in texture and appearance and shall be plane to a 1/8 "in 10 ft. tolerance.
2. Broomed Finish: After receiving the floated and troweled finishes, apply a broomed finish with a fiber-bristle brush in a direction transverse to the line of traffic.
3. Floated finish: Place, consolidate, strike off and level concrete. After the concrete has stiffened sufficiently, floating shall begin using a hand float, power trowel with float shoes or powered disc float. Cut down high spots and fill low spots to a 1/4" in 10 ft. tolerance. Float to a uniform sandy texture.
4. Scratched finish: After the concrete has been placed consolidated, struck off and leveled to a 1/4" in 2 ft. tolerance, roughen with stiff brushes or rakes before the final set.

C. Finish concrete floor surfaces in accordance with ACI 301.

D. Provide a troweled finish for base slabs.

E. Provide a floated finish for slabs as directed by the Engineer.

F. Provide a broom finish for exterior slabs, sidewalks, pavements and where directed by the Engineer.

G. Provide a scratched finish where concrete is specified to receive a subsequent concrete tapping.

H. In areas with floor drains, maintain floor elevation at walls; pitch surfaces uniformly to drains at one inch per 10 feet unless otherwise indicated on drawings.

I. Maximum variation of surface flatness for exposed concrete floors 1/8 inch in 10 feet.

3. 6 CURING AND PROTECTION

A. Submit methods for curing for approval by the Engineer.

B. Immediately after placement, protect concrete from premature drying, excessively hot or cold temperatures, and mechanical injury.

C. Maintain concrete with minimal moisture loss at relatively constant temperature for period necessary for hydration of cement and hardening of concrete.

D. Cure floor surfaces in accordance with MDOT Standards.

E. Absorptive Mat: Spread cotton fabric or burlap over floor slab areas. Spray with water until mats are saturated and maintain in saturated condition for 7 days.

F. Membrane Curing Compound: Apply curing compound in accordance with manufacture's instructions. Curing compound shall not contain any ingredients which might stain or otherwise injure the concrete or prevent a good bond for subsequent coatings or finishings.

3. 7 FIELD QUALITY CONTROL

A. Field inspection and testing will be performed in accordance with MDOT Standards and under provisions of Section 01400.

B. Provide free access to Work and cooperate with appointed firm.

C. Notify Engineer 24 hours (1 working day) in advance of any scheduled placement of concrete.

3. 8 FORM REMOVAL

A. Do not remove forms or bracing until concrete has gained sufficient strength to carry its own weight and imposed loads, and approved by the Engineer.

B. Results of tests may be used to verify the strength gain of the concrete prior to removal of forms Contractor shall be responsible for coordination of and payment for additional test cylinders requested for this purpose.

C. Loosen forms carefully. Do not wedge pry bars, hammers, or tools against finish concrete surfaces scheduled for exposure to view.

D. Store removed forms in manner that surfaces to be in contact with fresh concrete will not be damaged. Discard damaged forms.

3. 9 PATCHING

A. Allow Engineer to inspect concrete surfaces immediately upon removal of forms.

B. Excessive honeycomb or embedded debris in concrete is not acceptable. Notify Engineer upon discovery.

C. Patch imperfections in accordance with ACI 301.

3. 10 DEFECTIVE CONCRETE

A. Defective Concrete: Concrete not conforming to required lines, details, dimensions, tolerances or specified requirements.

B. Repair or replacement of defective concrete will be determined by the Engineer.

C. Do not patch, fill, touch-up, repair, or replace exposed concrete except upon express direction of Engineer for each individual area.

END OF SECTION

SECTION 04100

MORTAR

1. PART 1 GENERAL

1. 1 SECTION INCLUDES

A. Mortar and grout for masonry and Repair of Sanitary Sewer Manholes.

1. 2 RELATED WORK

A. Section 01400 - Quality Control: Testing laboratory services.

B. Section 02722 - Storm Sewerage Systems.

C. Section 0232 - Sanitary Sewer Systems.

1. 3 UNIT PRICE - MEASUREMENT AND PAYMENT

A. Mortar:
1. Basis of Measurement: Included in the unit price bid for other pay items of this project.
2. Basis of Payment: Includes all associated labor, material and equipment for mortar required for this project for a complete installation.

1. 4 REFERENCES

A. ASTM C5 - Quicklime for Structural Purposes.

B. ASTM C91 - Masonry Cement.

C. ASTM C94 - Ready-Mixed Concrete.

D. ASTM C144 - Aggregate for Masonry Mortar.

E. ASTM C150 - Portland Cement.

F. ASTM C207 - Hydrated Lime for Masonry Purposes.

G. ASTM C270 - Mortar for Unit Masonry.

H. ASTM C387 - Packaged, Dry, Combined Materials, for Mortar and Concrete.

I. ASTM C404 - Aggregates for Masonry Grout.

J. ASTM C476 - Grout for Masonry.

K. ASTM C595 - Blended Hydraulic Cement.

L. ASTM C780 - Preconstruction and Construction Evaluation of Mortars for Plain and Reinforced Unit Masonry.

M. ASTM C1019 - Method of Sampling and Testing Grout.

1. 5 DELIVERY, STORAGE, AND HANDLING

A. Deliver products to site under provisions of Section 01600.

B. Store and protect products under provisions of Section 01600.

C. Maintain packaged materials clean, dry, and protected against dampness, freezing, and foreign matter.

1. 6 ENVIRONMENTAL REQUIREMENTS

A. Maintain materials and surrounding air temperatures to minimum 50 degrees F (10 degrees C) prior to, during, and 48 hours after completion of masonry work.

1. 7 MIX TESTS

A. Test mortar and grout in accordance with Section 01400.

B. Testing of Mortar Mix: In accordance with ASTM C780.

C. Testing of Grout Mix: In accordance with ASTM C1019.

2. PART 2 PRODUCTS

A. Substitutions: Under provisions of Section 01600.

2. 2 MATERIALS

A. Portland Cement: ASTM C150, Type I, gray color.

B. Masonry Cement: ASTM C91, Type M.

C. Mortar Aggregate: ASTM C144, standard masonry type.

D. Hydrated Lime: ASTM C207.

E. Quicklime: ASTM C5, non-hydraulic type.

F. Grout Aggregate: ASTM C404.

G. Water: Clean and potable.

2. 3 MORTAR MIXES

A. Mortar for Load Bearing Walls and Partitions: ASTM C270, utilizing the Proportion Method to achieve 2500 psi 28 day strength.

B. Mortar for Non-load Bearing Walls and Partitions: ASTM C270, using the Property Method. Utilizing the Proportion Method to achieve 2500 psi 28 day strength.

C. Mortar for Reinforced Masonry: ASTM C270, utilizing the Proportion Method to achieve 2500 psi 28 day strength.

D. Pointing Mortar: ASTM C270.

2. 4 MORTAR MIXING

A. Thoroughly mix mortar ingredients in quantities needed for immediate use in accordance with ASTM C270.

B. Add admixtures in accordance with these specifications and with manufacturer's instructions. Provide uniformity of mix and coloration.

C. Do not use anti-freeze compounds to lower the freezing point of mortar.

D. If water is lost by evaporation, retemper only within two hours of mixing.

E. Use mortar within two hours after mixing at temperatures of 80 degrees F (26 degrees C), or two-and-one-half hours at temperatures under 50 degrees F (10 degrees C).

2. 5 GROUT MIXES

A. Bond Beams: Lintels: Shall obtain 2500 psi strength at 28 days; 7-8 inches slump; premixed type in accordance with ASTM C94 mixed in accordance with ASTM C476.

B. Engineered Masonry: 2500 psi strength at 28 days; 7-8 inches slump; premixed type in accordance with ASTM C476 or mixed accordance with ASTM C94.

2. 6 GROUT MIXING

A. Thoroughly mix mortar ingredients in quantities needed for immediate use in accordance with ASTM C476.

B. Add admixtures in accordance with manufacturer's instructions. Provide uniformity of mix. Also in accordance with Sec. 2.04.

C. Do not use anti-freeze compounds to lower the freezing point of grout.

3. PART 3 EXECUTION

3. 1 EXAMINATION

A. Request inspection of spaces to be grouted.

3. 2 SCHEDULES

A. Exterior Cavity Wall: Type S mortar with Type N pointing mortar.

END OF SECTION

APPENDIX A

Permit No. MMRR16042425

OCCUPANCY LICENSE AGREEMENT

This Agreement ("Agreement") made this _____ day of _____, by and between **Mid-Michigan Railroad, Inc.** ("LICENSOR"), whose address is **C/O Genesee & Wyoming Railroad Services, Inc., 13901 Sutton Park Dr. South, Suite 160, Jacksonville, FL 32224**, and **Blank Tile Drain Drainage District (**"LICENSEE"), whose address is **111 S. Michigan Avenue, Saginaw, MI 48602.**

WHEREAS, LICENSEE has submitted a written request or application to LICENSOR requesting permission to occupy LICENSOR'S property located at or near the location specified in Section 1 below; and

WHEREAS, LICENSOR is willing to grant to LICENSEE the limited right to occupy LICENSOR'S property for the limited purpose described herein.

NOW THEREFORE, in consideration of these promises, the Agreement herein, and other good and valuable consideration the receipt and sufficiency of which are hereby acknowledged, the parties agree as follows:

Section 1. LOCATION/DESCRIPTION.

1.1 LICENSOR hereby conveys to LICENSEE a license ("Occupancy") to operate upon, along or across LICENSOR'S property as indicated below:

A. ( ) above ground (X) below ground

B. ( ) water pipeline ( ) sewer pipeline (X) stormwater pipeline ( ) cable tv wireline ( ) fiber optic wireline

( ) communications wireline ( ) power wireline

located at or near Mile Post **18.406, St. Louis Subdivision, Latitude: 43.411878, Longitude: -84.251745,** at or near **Hemlock**, County of **Saginaw**, State of **MI**. Nothing herein contained shall be construed as conferring any property right on LICENSEE.

1.2 Said Occupancy to be located and described as follows:

Underground Storm Sewer – Replacement of 12" pipe with 36" pipe including necessary appurtenances, structures and other related fixtures, equipment, marker posts or electric power **("LICENSEE'S Facilities"), placed as shown on Exhibit A attached hereto and made a part hereof. LICENSEE'S Facilities are subordinated to all matters of record. LICENSOR reserves the right to use the area three (3) feet below ground level and to enter LICENSEE'S Facilities for construction and maintenance of LICENSOR'S property.**

1.3 THE UNDERSIGNED AGREES that the continuation of the Occupancy and use herein shall be subject to the conditions specified herein.

Section 2. USE/PURPOSE/OWNERSHIP.

2.1 LICENSEE'S Facilities shall be installed to the satisfaction and approval of LICENSOR'S Engineer and all costs of LICENSOR'S Engineer and other technicians or professional consultants as may be required from time to time shall be borne by LICENSEE.

2.2 LICENSEE hereby agrees to reimburse LICENSOR for any and all expenses LICENSOR may incur or be subjected to, or in consequence of, the planning, negotiation, installation, construction, location, changing, alteration, relocation, operation or renewal of said Facilities, within thirty (30) days after receipt of LICENSOR'S invoice for payment.

Section 3. FEE.

Said Agreement and Occupancy is granted contingent upon payment to LICENSOR of an **one-time** fee of **$7,500.** LICENSEE shall also submit a **one-time agreement processing fee** of **$1000, engineering review fee** of **$1500** and a **contractor right of**

entry fee of **$1500,** which shall be covered by a separate agreement known as CONTRACTOR RIGHT OF ENTRY LICENSE AGREEMENT. Billing or acceptance by LICENSOR of any one-time fee shall not imply a definite term or otherwise restrict either party from canceling this Agreement as herein provided.

Section 4. TERM/TERMINATION.

This Agreement shall continue in force indefinitely from and after the date hereof, subject, however, to the right of either party to terminate this Agreement as to the Occupancy or LICENSEE'S Facilities, or any part of LICENSEE'S Facilities, at any time, upon giving the other party sixty (60) days' notice in writing of its desire to terminate this Agreement, and indicating in said notice the extent of said facilities and facilities to which such termination shall apply. Notwithstanding the foregoing, in the event that (i) the use of the Occupancy as set forth above in Sections 1 and 2 is materially changed, (ii) LICENSEE'S Facilities are removed, or (iii) LICENSEE defaults on a material obligation hereunder and such default is not cured within 30 days after receipt of written notice from LICENSOR describing such default (or such longer cure period as determined in LICENSOR'S sole discretion), this Agreement shall automatically terminate. When this Agreement shall be terminated as to LICENSEE'S Facilities, or as to any part thereof, LICENSEE within thirty (30) days' after the expiration of the time stated in said termination notice, agrees at LICENSEE'S own risk and sole expense to remove LICENSEE'S Facilities from the property of LICENSOR, or such portion thereof as LICENSOR shall require removed, and to restore LICENSOR premises and property to a neat and safe condition to the satisfaction of LICENSOR'S designated Engineer or Representative, and if LICENSEE shall fail to do so within said time, LICENSOR shall have the right, but not the duty, to remove and restore the same, at the risk and expense of LICENSEE.

Section 5. INDEMNITY/LIABILITY.

5.1. LICENSOR shall not be responsible for any damage to LICENSEE'S Facilities at any time while this Agreement is in effect.

5.2 (a) LICENSEE HEREBY AGREES TO INDEMNIFY, SAVE, HOLD HARMLESS AND DEFEND LICENSOR AND ITS PARENT, AFFILIATES AND EACH OF THEIR RESPECTIVE DIRECTORS, OFFICERS, AGENTS AND EMPLOYEES FROM AND AGAINST (I) INJURY TO OR DEATH OF ANY PERSON OR PERSONS WHOMSOEVER, INCLUDING BUT NOT LIMITED TO THE AGENTS, EMPLOYEES OR CONTRACTOR(S) OF THE PARTIES HERETO, AND (II) THE LOSS OR DAMAGE TO ANY PROPERTY WHATSOEVER, INCLUDING PROPERTY CLAIMS, DEMANDS, SUITS, JUDGMENTS OR EXPENSES INCURRED IN CONNECTION THEREWITH, RESULTING FROM OR ARISING OUT OF THE ACTS OR OMISSIONS OF LICENSEE, ITS AGENTS, EMPLOYEES OR CONTRACTOR(S), OR RESULTING FROM, ARISING OUT OF, OR OCCURRING IN CONNECTION WITH THE ENTRY OR PRESENCE OF LICENSEE, ITS AGENTS, EMPLOYEES OR CONTRACTOR(S) ON THE PROPERTY, OR RESULTING FROM, ARISING OUT OF, OR OCCURRING IN CONNECTION WITH THE PERFORMANCE OR EXECUTION OF ANY WORK PERFORMED UNDER THIS AGREEMENT OR INCIDENTAL THERETO, INCLUDING BUT NOT LIMITED TO THE USE AND OCCUPANCY OF LICENSEE'S FACILITIES BY LICENSEE, ITS PERMITTEES, INVITEES OR ANY OTHER PERSON OR ENTITY.

(b) THE PARTIES ACKNOWLEDGE THAT THE USE OF LICENSOR'S PREMISES IS FOR THE SOLE CONVENIENCE OF LICENSEE AND THAT LICENSOR SHALL HAVE NO DUTY TO LICENSEE, ITS OFFICERS, EMPLOYEES, AGENTS OR CONTRACTORS TO PROVIDE A REASONABLY SAFE PLACE IN WHICH TO WORK, TO PROVIDE ADEQUATE OR SAFE METHODS AND EQUIPMENT FOR THEIR WORK OR TO INSPECT OR MAINTAIN LICENSEE'S FACILITIES FOR SAID SAFE METHODS AND WORK EQUIPMENT NOR TO GIVE ANY WARNINGS OR OTHER NOTICES TO LICENSEE'S EMPLOYEES OR INVITEES REGARDING SAFETY EITHER OF LICENSEE'S FACILITIES AND RELATED WORKPLACE OR LICENSOR'S PROXIMATE RAILROAD OPERATIONS AND THAT ALL SUCH DUTIES SHALL BE ASSUMED BY LICENSEE WHO FURTHER AGREES TO DEFEND AND HOLD HARMLESS LICENSOR, ITS PARENT AND AFFILIATES FROM ANY AND ALL CLAIMS ALLEGING ANY FAILURE TO PERFORM SAID DUTIES.

(c) IN NO EVENT UNDER THIS AGREEMENT WILL LICENSOR HAVE ANY LIABILITY FOR INDIRECT, SPECIAL, PUNITIVE, INCIDENTAL OR CONSEQUENTIAL DAMAGES. THE TERM "LICENSOR" AS USED IN THIS SECTION 5 SHALL INCLUDE THE SUCCESSORS, ASSIGNS, AND AFFILIATED COMPANIES OF LICENSOR AND ANY OTHER RAILROAD COMPANY THAT MAY BE LAWFULLY OPERATING UPON AND OVER THE TRACKS, OR THE TRACKS CROSSING OR ADJACENT TO THE TRACKS, AND THE OFFICERS, AGENTS, INVITEES AND EMPLOYEES THEREOF.

Section 6. RESERVED.

Section 7. RESERVED.

Section 8. ASSIGNMENT.

This Agreement or Occupancy herein granted may not be transferred, assigned or sublet to another party not a signatory hereto without the prior written approval of LICENSOR. Said approval by LICENSOR, subject to LICENSEE'S satisfaction of applicable transfer of rights or assignment fees in effect at that time, shall not be unreasonably withheld.

Section 9. ENVIRONMENTAL/HAZARDOUS MATERIALS.

LICENSOR may, at LICENSOR'S sole discretion, during the removal of LICENSEE'S Facilities in accordance with Section 4, require LICENSEE to conduct an environmental appraisal and report of the property formerly occupied by LICENSEE'S Facilities at LICENSEE'S sole cost and expense. All reports shall be prepared by a LICENSOR approved environmental consultant, to determine if LICENSOR'S property has been environmentally impacted by said Occupancy. All environmental reports, which are prepared subject to this clause, shall be immediately available to LICENSOR by LICENSEE and shall be treated as confidential information by the parties unless disclosure of such environmental reports are required by law. This clause shall survive termination of this Agreement.

Section 10. NOTIFICATION.

In the case of emergency repairs, LICENSEE shall contact LICENSOR by calling LICENSOR's emergency number at (866) 527-3499 in order to obtain LICENSOR'S consent prior to entering LICENSOR's property.

Section 11. RESERVED.

Section 12. ALTERATIONS/REPAIRS.

12.1 In the event LICENSEE desires to make changes in the physical or operational characteristics of said Occupancy, LICENSEE shall first obtain in writing the consent and approval of LICENSOR.

12.2 Any entry onto LICENSOR'S property by LICENSEE its employees, agents, representatives or contractors after LICENSEE'S Facilities have initially been constructed shall occur only upon obtaining LICENSOR'S consent pursuant to Section 12 herein, if required, and entering into an additional CONTRACTOR RIGHT OF ENTRY LICENSE AGREEMENT with LICENSOR prior to entry. LICENSEE agrees that any physical or operational changes that LICENSEE desires to make shall be made at LICENSEE'S sole risk, cost and expense and subject to all the terms, covenants conditions and limitation of this Agreement. Any "flagging" services determined at LICENSOR's sole discretion to be necessary shall be at LICENSEE'S sole cost and expense.

Section 13. RESERVED.

Section 14. INSURANCE.

LICENSEE agrees to comply with the **INSURANCE REQUIREMENTS,** attached hereto as Exhibit C and made a part hereof, and shall provide the required Certificate of Insurance to LICENSOR simultaneous to the execution of this Agreement.

Section 15. RESERVED.

Section 16. RESERVED.

Section 17. RESERVED.

Section 18. GOVERNMENTAL REQUIREMENTS.

18.1 LICENSEE shall comply with any and all laws, statutes, ordinances, rules, regulations, orders, decisions (collectively, the "Laws"), issued by any federal, state or municipal governmental body or agency established thereby ("Authority"), relating to the construction, maintenance, and use of the LICENSEE's Facilities by LICENSEE and any the use of LICENSOR'S property.

18.2 LICENSEE, in its Occupancy as granted herein, shall not create or permit any condition on LICENSOR's property that could present a threat to human health or to the environment. LICENSEE shall at all times be in full compliance with all Laws, present or future, set by any Authority, including but not limited to any, environmental laws concerning water quality (surface of underground), hazardous substances and hazardous waste(s).

18.3 Should any discharge, leakage, spillage, emission or pollution of any type occur or arise on LICENSOR's Property as a result of LICENSEE'S presence, use, operation or exercise of the rights granted herein, LICENSEE shall immediately notify LICENSOR and shall, at LICENSEE'S expense, be obligated to clean all property affected thereby, whether owned or controlled by LICENSOR or any third persons, to the satisfaction of LICENSOR (insofar as the property owned or controlled by LICENSOR is concerned) and any governmental body having jurisdiction in the matter. LICENSOR may, at is option, clean the property; if LICENSOR elects to do so, LICENSEE shall pay LICENSOR the reasonable cost of such cleanup promptly upon the receipt of a bill therefor.

18.4 LICENSEE AGREES TO RELEASE, INDEMNIFY AND DEFEND LICENSOR AND ITS PARENT AND AFFILIATES FROM AND AGAINST ALL LIABILITY, COST AND EXPENSE (INCLUDING, WITHOUT LIMITATION, ANY FINES, PENALTIES, JUDGMENTS, LITIGATION COSTS AND ATTORNEY FEES) INCURRED BY LICENSOR AS A RESULT OF LICENSEE'S BREACH OF THIS SECTION 18 REGARDLESS OF LICENSOR'S NEGLIGENCE, EXCEPT TO THE EXTENT ANY SUCH LIABILITIES, COSTS AND EXPENSES ARE SOLELY CAUSED BY THE GROSS NEGLIGENCE OF LICENSOR, ITS OFFICERS, AGENTS, INVITEES OR EMPLOYEES.

Section 19. RESERVED.

Section 20. RESERVED.

Section 21. RESERVED.

Section 22. LEGAL NOTICES.

Any notice, demand, approval, consents or communication required, permitted or desired to be given hereunder shall be in writing and shall be served on the parties at the following respective addresses:

LICENSEE: Blank Tile Drain Drainage District
111 S. Michigan Avenue
Saginaw, MI 48602
Attention: Brian Wendling

LICENSOR: Mid-Michigan Railroad, Inc.
c/o Genesee & Wyoming Railroad Services, Inc.
Real Estate Department
13901 Sutton Park Drive South
Suite 160
Jacksonville, FL 32224

Copy to:
General Counsel
Genesee & Wyoming Inc.
20 West Avenue
Darien, CT 06820

the attention of such other person or officer, as any party may by written notice designate. Any notice, demand or communication required, permitted or desired to be given hereunder shall be sent either (a) by hand delivery, in which case

notice shall be deemed received when actually delivered, (b) by prepaid certified or registered mail, return receipt requested, in which case notice shall be deemed received three calendar days after deposit, postage prepaid in the United States Mail, or (c) by a nationally recognized overnight courier, in which case notice shall be deemed received one business day after deposit with such courier.

Section 23. SPECIAL PROVISIONS.

If required by LICENSOR, LICENSEE at its sole cost and expense, shall furnish LICENSOR with a **survey drawing**, showing the final exact location of said Occupancy and LICENSEE'S Facilities. The survey drawing shall indicate LICENSOR'S survey valuation station which said installation is located, and/or the position of LICENSEE'S Facilities in relation to the center line of the track and/or the centerline of the closest public street crossing said track(s). Said survey drawing to be attached to this Agreement as **Exhibit B** and made a part hereof.

Section 24. PRIOR AGREEMENTS.

Execution of this Agreement shall supersede and/or cancel, as of the date first above written, any and all previous agreements, if any, related to the Occupancy and use herein described, which may exist between the parties or their predecessors.

Section 25. APPLICABLE LAW.

This Agreement shall be governed by and construed under the laws of the State of MI without regard to the choice of law provisions thereof.

Section 26. INTERPRETATION/SEVERABILITY.

To the maximum extent possible, each provision of this Agreement shall be interpreted in such manner as to be effective and valid under applicable law, but if any provision of this Agreement shall be prohibited by, or held to be invalid under, applicable law, such provision shall be ineffective solely to the extent of such prohibition or invalidity, and this shall not invalidate the remainder of such provision or any other provision of this Agreement.

Section 26. HEADINGS. The headings of the Sections of this Agreement are inserted for convenience only and are not intended to govern, limit or aid in the construction of any term or provision of this Agreement.

Section 27. CONSTRUCTION OF TERMS. The terms of this Agreement have been arrived at after mutual negotiation and, therefore, it is the intention of the Parties that its terms not be construed against any of the Parties by reason of the fact that it was prepared by one of the Parties.

Section 28. COUNTERPARTS.

This Agreement may be executed in multiple counterparts, each of which shall, for all purposes, be deemed an original but which together shall constitute one and the same instrument, and counterparts of this Agreement may also be exchanged via electronic facsimile machines and any electronic facsimile of any party's signature shall be deemed to be an original signature for all purpose.

(Signature Page Follows)

THIS AGREEMENT IS hereby declared to be binding upon the parties hereto.

IN WITNESS WHEREOF, the undersigned have hereunto set their hand and seals this _____ day of _____.

LICENSOR

Mid-Michigan Railroad, Inc.

By: _____

Name:

Its:

LICENSEE

Blank Tile Drain Drainage District

By: _____

Name:

Its:

Permit No. MMRR16042425

EXHIBIT A

LICENSEE'S FACILITIES

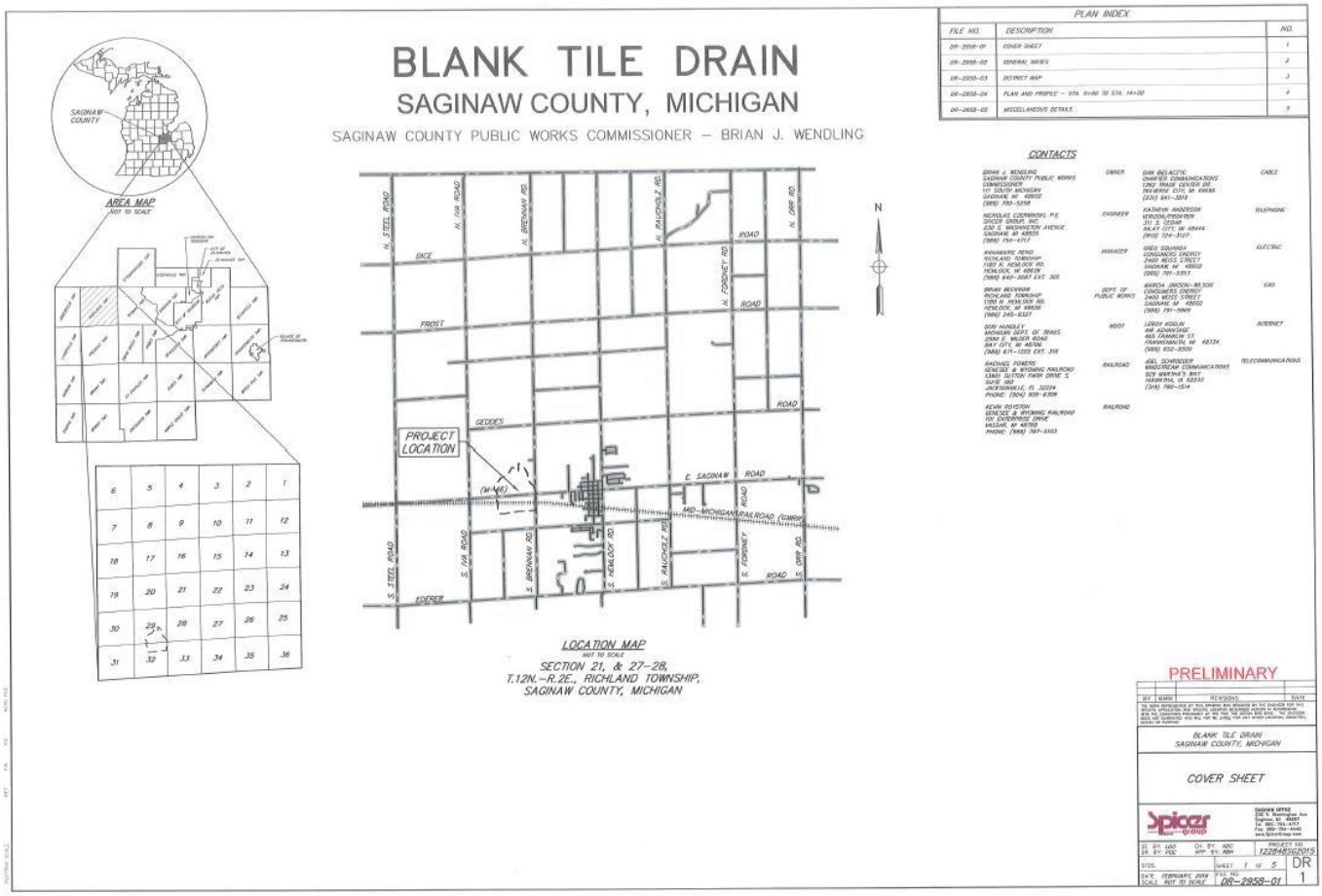

Permit No. MMRR16042425

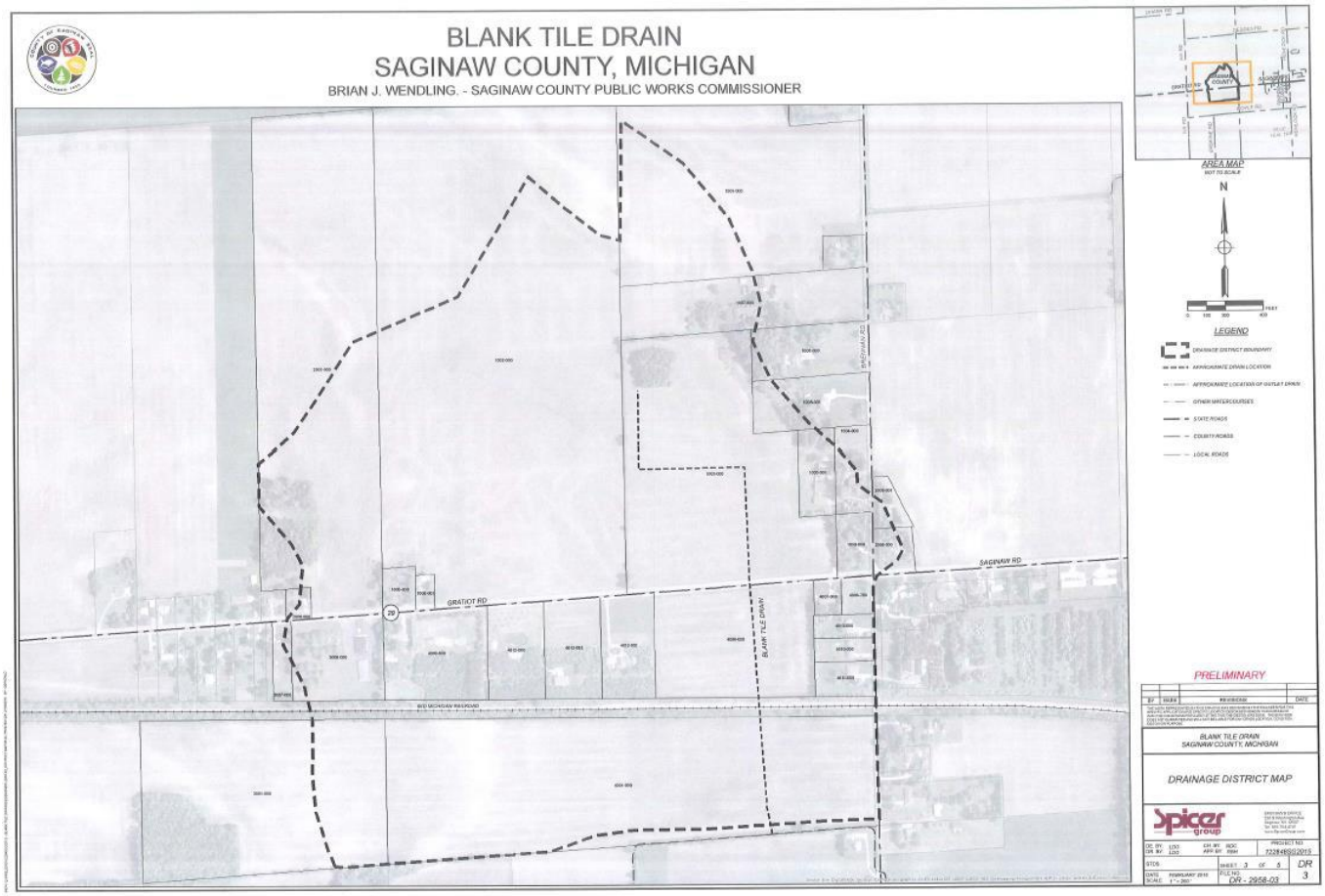

Permit No. MMRR16042425

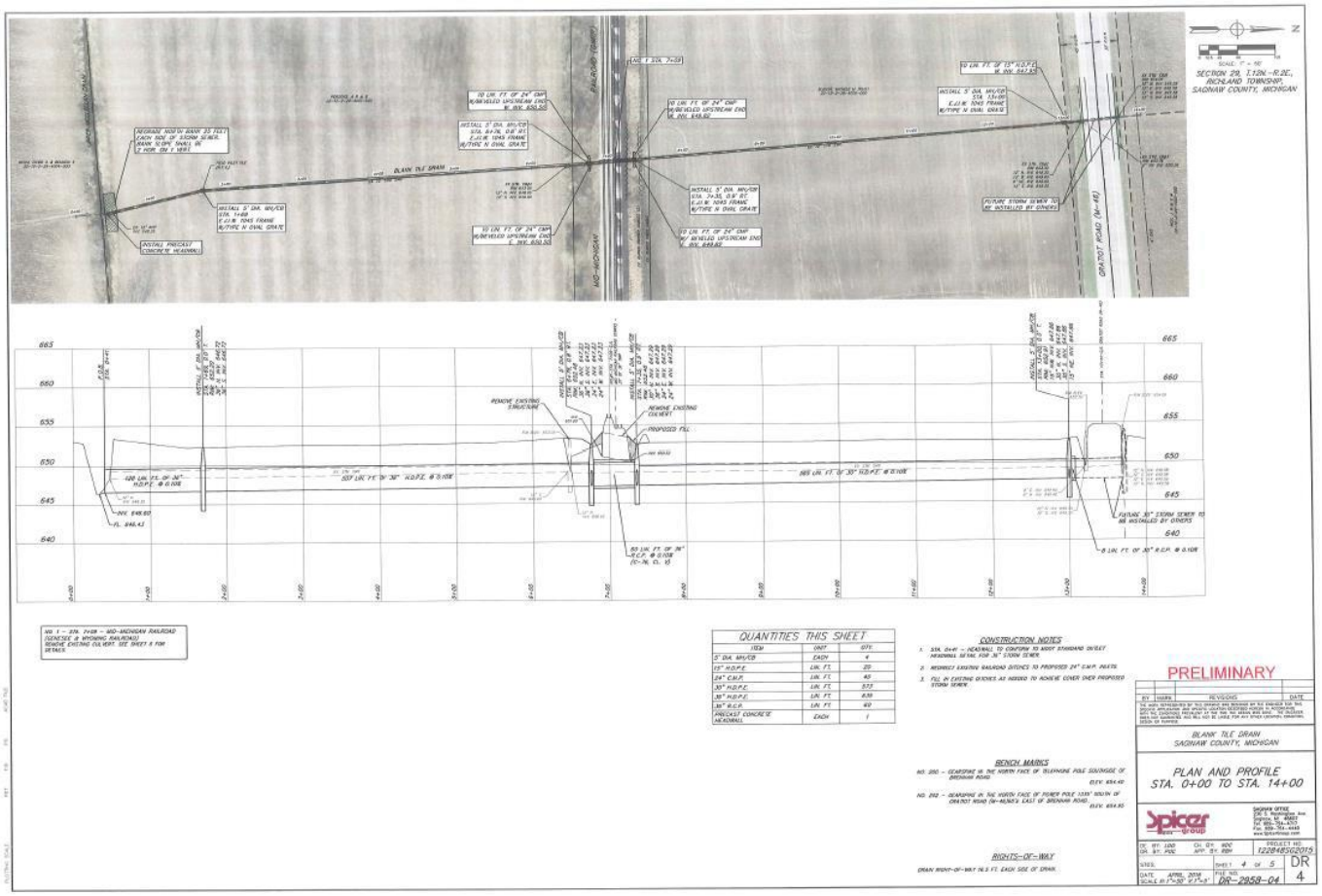

AXIS 1 – STA. 7+09 – MID-MICHIGAN RAILROAD (CENESEE & MYSHING RAILROAD)
REMOVE EXISTING CULVERT. SEE SHEET 5 FOR DETAILS.

QUANTITIES THIS SHEET

ITEM	UNIT	QTY.
5' DIA. MH/CB	EACH	4
13" H.D.P.E.	LIN. FT.	20
24" C.M.P.	LIN. FT.	40
30" H.D.P.E.	LIN. FT.	573
36" H.D.P.E.	LIN. FT.	630
36" R.C.P.	LIN. FT.	40
PRECAST CONCRETE HEADWALL	EACH	1

CONSTRUCTION NOTES

1. STA. 0+41 – HEADWALL TO CONFORM TO MDOT STANDARD OUTLET HEADWALL DETAIL FOR 36" STORM SEWER.
2. REDIRECT EXISTING RAILROAD DITCHES TO PROPOSED 24" C.M.P. INLETS.
3. FILL IN EXISTING DITCHES AS NEEDED TO ACHIEVE COVER OVER PROPOSED STORM SEWER.

BENCH MARKS

NO. 280 – GEARSPIKE IN THE NORTH FACE OF TELEPHONE POLE SOUTHEAST OF BRENNAN ROAD.
ELEV. 654.40

NO. 282 – GEARSPIKE IN THE NORTH FACE OF POWER POLE 1320' SOUTH OF GRATIOT ROAD (M-46)&S.S. EAST OF BRENNAN ROAD.
ELEV. 654.95

RIGHTS-OF-WAY

DRAIN RIGHT-OF-WAY 16.5 FT. EACH SIDE OF DRAIN.

PRELIMINARY

BY	MARK	REVISIONS	DATE

THE WORK REPRESENTED BY THIS DRAWING WAS DESIGNED BY THE ENGINEER FOR THE PROJECT APPLICABLE AND SPECIFIC LICENSED PERSONS IN ACCORDANCE WITH THE CONDITIONS PRESENTED AT THE TIME THIS DRAWING WAS MADE. NO REVISION TO THIS DRAWING SHALL BE MADE BY PERSONS OTHER THAN THE ENGINEER WITHOUT HIS OR HER PERMISSION.

BLANK TILE DRAIN
SAGINAW COUNTY, MICHIGAN

PLAN AND PROFILE
STA. 0+00 TO STA. 14+00

Spicer Group

SAGINAW OFFICE
517 N. MICHIGAN Ave.
SAGINAW, MI 48602
PH: 989-754-4747
FAX: 989-754-4749
www.spicergroup.com

DR. BY: LDD CH. BY: WDC
DR. BY: PDC APP. BY: RBH
PROJECT NO. 122848362015

DATE APRIL 2016 SHEET 4 OF 5
SCALE 0'1"=50' 0'1"=5' FILE NO. DR-2958-04
DR 4

Permit No. MMRR16042425

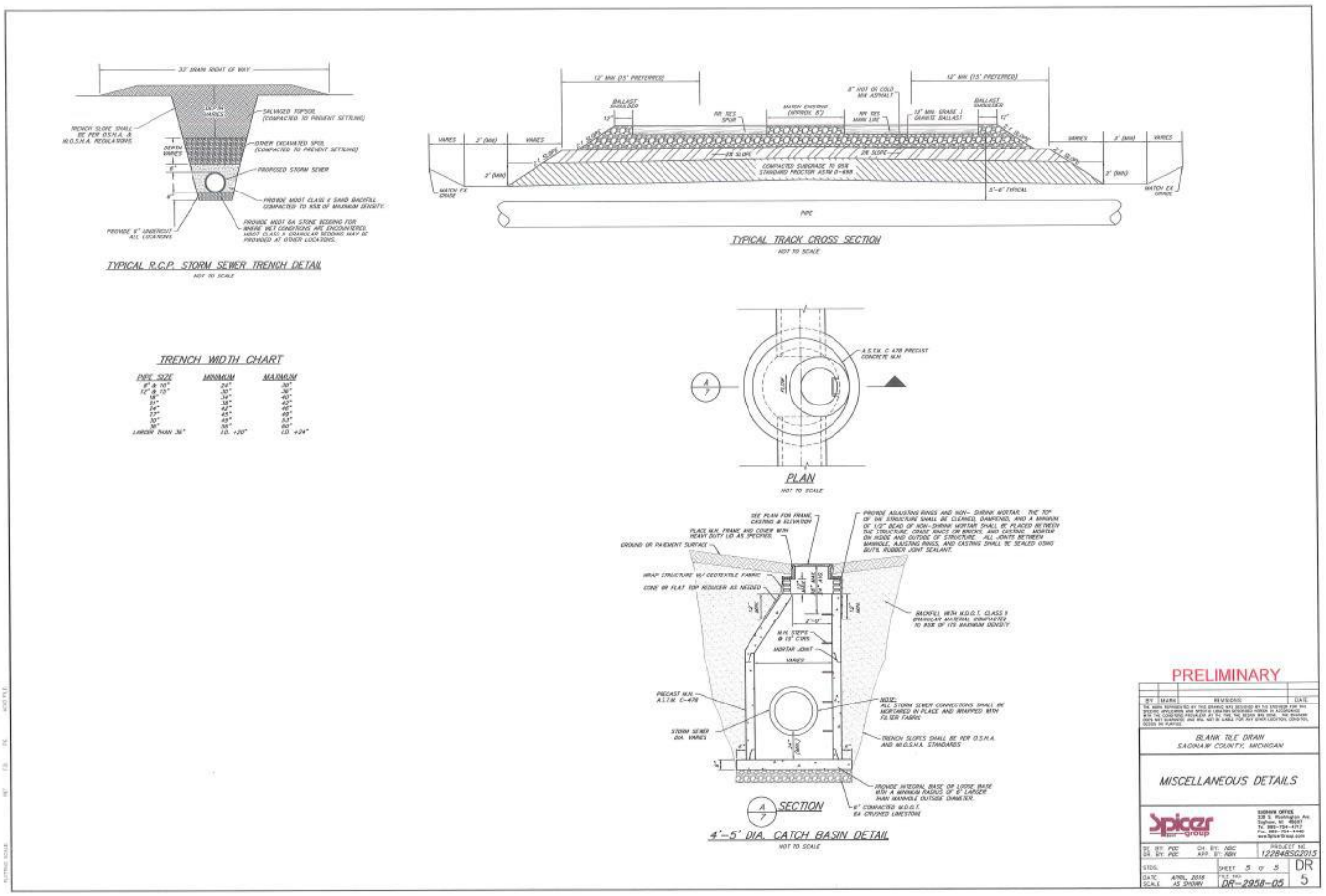

EXHIBIT B

SURVEY

EXHIBIT C

INSURANCE REQUIREMENTS

(a) The Licensee shall, at its own cost and expense or through insurance provided by the County of Saginaw, prior to entry onto Licensor's Property or the commencement of any work pursuant to this Agreement, procure and thereafter maintain throughout the term of this Agreement the following types and minimum amounts of insurance:

(i) The Licensee shall maintain Public Liability or Commercial General Liability Insurance ("CGL"), including Contractual Liability Coverage and CG 24 17 "Contractual Liability – Railroads" endorsement, covering all liabilities assumed by the Licensee under this Agreement, without exception or restriction of any kind, with a combined single limit of not less than Two Million Dollars ($2,000,000) for Bodily Injury and/or Property Damage Liability per occurrence, and an aggregate limit of not less than Six Million Dollars ($6,000,000) per annual policy period. Such insurance policy shall be endorsed to provide a **Waiver of Subrogation in favor of the Licensor and its affiliates and** shall name the **Licensor and its affiliates as Additional Insured**. An Umbrella or Excess policy may be utilized to satisfy the required limits of liability under this section, but must "follow form" and afford no less coverage than the primary policy.

(ii) The Licensee shall maintain Commercial Automobile Insurance for all owned, non-owned and hired vehicles with a combined single limit of not less than One Million Dollars ($1,000,000) for Bodily Injury and/or Property Damage Liability per occurrence. Such insurance policy shall be endorsed to provide a **Waiver of Subrogation in favor of the Licensor and its affiliates and** shall **name the Licensor and its affiliates as Additional Insured**.

(iii) The Licensee shall maintain Statutory Workers' Compensation and Employers' Liability Insurance for its employees (if any) with minimum limits of not less than One Million Dollars ($1,000,000) for Bodily Injury by Accident, Each Accident; One Million Dollars ($1,000,000) for Bodily Injury by Disease, Policy Limit; One Million Dollars ($1,000,000) for Bodily Injury by Disease, Each Employee. Such insurance policy shall be endorsed to provide a **Waiver of Subrogation in favor of the Licensor and its affiliates**, if applicable.

(iv) **Prior to any construction project within 50' of the railroad track,** the Licensee shall purchase Railroad Protective Liability Insurance naming the Railroad as the named insured with limits of Two Million Dollars ($2,000,000) each occurrence and Six Million Dollars ($6,000,000) aggregate limit The policy shall be issued on a standard ISO form CG 00 35 12 03, or, if available, obtain such coverage from the Railroad.

(b) The following general insurance requirements shall apply:

(i) The specified insurance policies must be effected under standard form policies underwritten by insurers licensed in the state where work is to be performed, and carry a minimum Best's rating of "A-" and size "Class VII" or better. The Licensor reserves the right to reject as inadequate any insurance coverage provided by an insurer that is rated less than the ratings specified in this section.

(ii) All coverages shall be **primary and non-contributory to any insurance coverages maintained by** the **Licensor** and **its affiliates.**

(iii) All insurance policies shall be endorsed to provide the Licensor with thirty (30) days prior written notice of cancellation, non-renewal or material changes.

(iv) The Licensee shall provide the Licensor with certificates of insurance evidencing the insurance coverages, terms and conditions required prior to commencement of any activities on or about the Property. Said certificates should reference this Occupancy License Agreement by agreement date and description and shall be furnished to the Licensor at the following address, or to such other address as the Licensor may hereafter specify:

Mid-Michigan Railroad, Inc.
C/O Genesee & Wyoming Railroad Services, Inc.
13901 Sutton Park Drive South, Suite 160
Jacksonville, FL 32224

(v) If any policies providing the required coverages are written on a Claims-Made basis, the following shall apply:

(1) The retroactive date shall be prior to the commencement of the work;

(2) The Licensee shall maintain such policies on a continuous basis;

(3) If there is a change in insurer or policies are canceled or not renewed, the Licensee shall purchase an extended reporting period of not less than three (3) years after the contract completion date; and

(4) Licensee shall arrange for adequate time for reporting of any loss under this Agreement.

(c) The Licensor may require the Licensee to purchase additional insurance if the Licensor reasonably determines that the amount of insurance then being maintained by the Licensee is insufficient in light of all relevant factors. If the Licensee is required to purchase additional insurance, the Licensor will notify the Licensee. Failure of the Licensee to comply within thirty (30) days shall be considered a default subject to termination of the Agreement.

(d) Furnishing of insurance by the Licensee shall not limit the Licensee's liability under this Agreement, but shall be additional security therefore.

(e) The above indicated insurance coverages shall be enforceable by any legitimate claimant after the termination or cancellation of this Agreement, or any amendment hereto, whether by expiration of time, by operation of law or otherwise, so long as the basis of the claim against the insurance company occurred during the period of time when the Agreement was in effect and the insurance was in force.

(f) Failure to provide the required insurance coverages or endorsements (including contractual liability endorsement) or adequate reporting time shall be at Licensee's sole risk.

(g) If contractors are utilized, the Licensee agrees to require all such contractors to comply with the insurance requirements of this Exhibit C and sign a separate right of entry agreement, as required by the Agreement.

APPENDIX B

NOTES:

ALL STEEL REINFORCEMENT SHALL BE #4 BARS.

EXPOSED EDGES OF THE HEADWALL SHALL BE CHAMFERED 1/2".

OUTFALL LABEL TO BE USED ONLY WHERE STORMWATER WILL DISCHARGE DIRECTLY TO THE WATERS OF THE STATE.

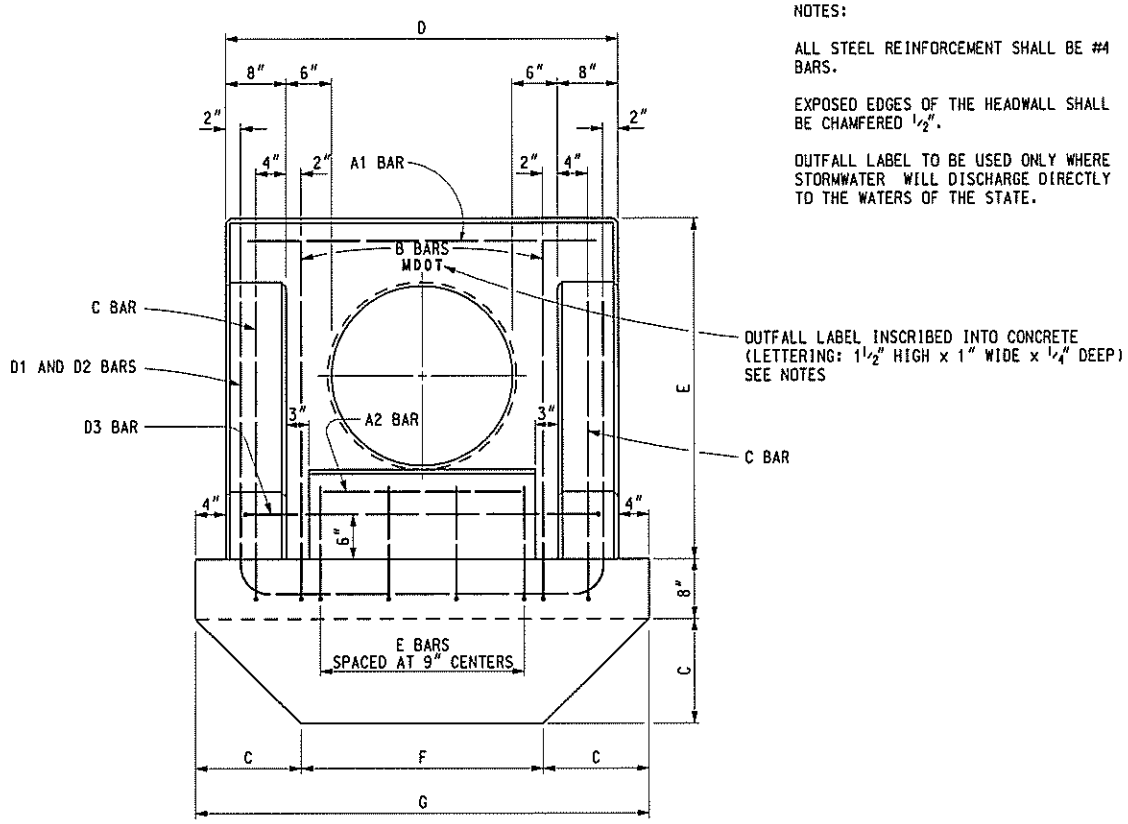

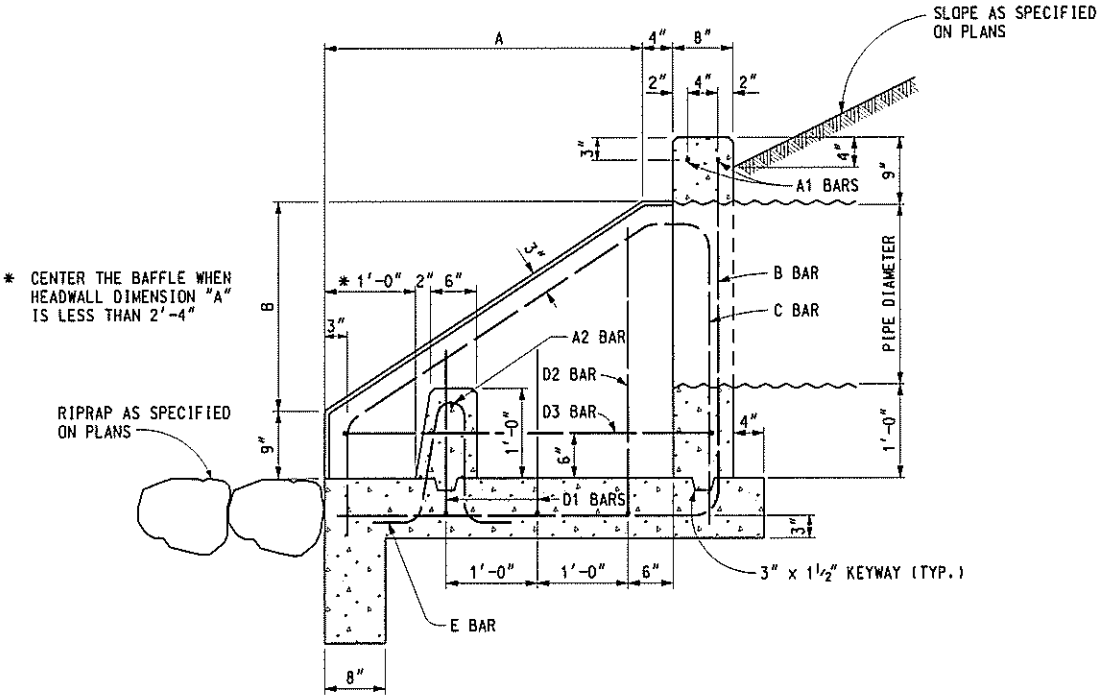

OUTLET HEADWALL
(SHOWN WITH BAFFLE)

MDOT Michigan Department of Transportation PREPARED BY DESIGN SUPPORT AREA DRAWN BY: B.L.T. CHECKED BY: W.K.P.	DEPARTMENT DIRECTOR Gloria J. Jeff APPROVED BY: John C. Friend ENGINEER OF DELIVERY APPROVED BY: Gilbert Rabaut ENGINEER OF DEVELOPMENT	MICHIGAN DEPARTMENT OF TRANSPORTATION BUREAU OF HIGHWAY DEVELOPMENT STANDARD PLAN FOR OUTLET HEADWALLS			
		11-17-2005 F.H.W.A. APPROVAL	4-21-2005 PLAN DATE	R-85-D	SHEET 1 OF 2

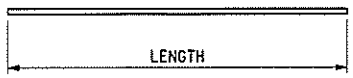

A BAR

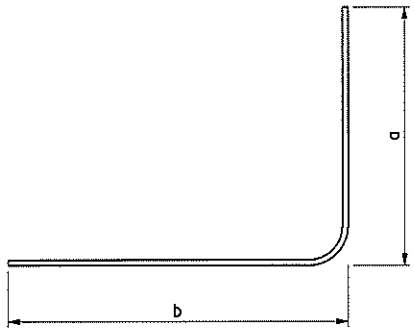

B BAR

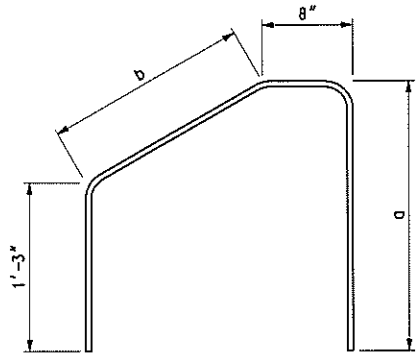

C BAR

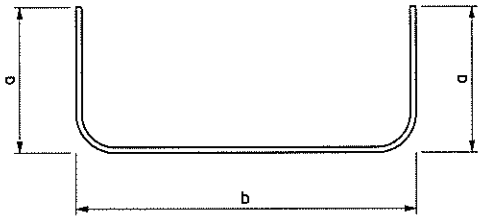

D BAR

PIPE DIAMETER	HEADWALL DIMENSIONS							CONCRETE PER ONE HEADWALL (CYD)
	A	B	C	D	E	F	G	
6"	1'-3"	10"	10"	2'-10"	2'-3"	1'-10"	3'-6"	0.5
8"	1'-6"	1'-0"	10"	3'-0"	2'-5"	2'-0"	3'-8"	0.6
10"	1'-9"	1'-2"	10"	3'-2"	2'-7"	2'-2"	3'-10"	0.7
12"	2'-0"	1'-4"	10"	3'-4"	2'-9"	2'-4"	4'-0"	0.8
15"	2'-4"	1'-7"	11"	3'-7"	3'-0"	2'-5"	4'-3"	0.9
18"	2'-9"	1'-10"	1'-0"	3'-10"	3'-3"	2'-6"	4'-6"	1.0
24"	3'-6"	2'-4"	1'-1"	4'-4"	3'-9"	2'-10"	5'-0"	1.5
30"	4'-3"	2'-10"	1'-4"	4'-10"	4'-3"	2'-10"	5'-6"	1.8
36"	5'-0"	3'-4"	1'-4"	5'-4"	4'-9"	3'-4"	6'-0"	2.2

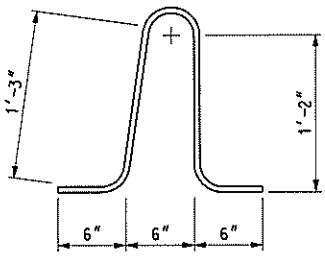

E BAR

STEEL QUANTITIES FOR ONE OUTLET HEADWALL WITH BAFFLE

STEEL QUANTITIES FOR ONE OUTLET HEADWALL WITHOUT BAFFLE

PIPE DIA.	A1 BAR		B BAR				C BAR				D1 BAR				D2 BAR				D3 BAR				TOTAL WEIGHT OF BARS (LBS)	A2 BAR		E BAR		TOTAL WEIGHT OF BARS (LBS)
	TOTAL LENGTH	NO.	DIMENSIONS		TOTAL LENGTH	NO.	DIMENSIONS		TOTAL LENGTH	NO.	DIMENSIONS		TOTAL LENGTH	NO.	DIMENSIONS		TOTAL LENGTH	NO.	DIMENSIONS		TOTAL LENGTH	NO.		TOTAL LENGTH	NO.	TOTAL LENGTH	NO.	
			a	b			a	b			a	b			a	b			a	b								
6"	2'-6"	2	1'-11"	2'-6"	4'-5"	2	1'-10"	1'-3"	5'-0"	2	1'-1"	2'-6"	4'-8"	1					1'-7"	2'-6"	5'-8"	1	23	8"	1	3'-8"	2	29
8"	2'-8"	2	2'-2"	2'-8"	4'-10"	2	2'-0"	1'-6"	5'-5"	2	1'-3"	2'-8"	5'-2"	1					1'-10"	2'-8"	6'-4"	1	26	10"	1	3'-8"	2	32
10"	2'-10"	2	2'-5"	2'-10"	5'-3"	2	2'-2"	1'-10"	5'-11"	2	1'-5"	2'-10"	5'-8"	1					2'-1"	2'-10"	7'-0"	1	28	1'-0"	1	3'-8"	2	34
12"	3'-0"	2	2'-8"	3'-0"	5'-8"	2	2'-4"	2'-1"	6'-4"	2	1'-7"	3'-0"	6'-2"	2					2'-4"	3'-0"	7'-8"	1	34	1'-2"	1	3'-8"	2	40
15"	3'-3"	2	3'-0"	3'-3"	6'-3"	2	2'-7"	2'-6"	7'-0"	2	1'-10"	3'-3"	6'-11"	2					2'-8"	3'-3"	8'-7"	1	38	1'-5"	1	3'-8"	3	46
18"	3'-6"	2	3'-5"	3'-6"	6'-11"	2	2'-10"	3'-0"	7'-9"	2	2'-1"	3'-6"	7'-8"	2					3'-1"	3'-6"	9'-8"	1	41	1'-8"	1	3'-8"	3	50
24"	4'-0"	2	4'-2"	4'-0"	8'-2"	2	3'-4"	3'-11"	9'-2"	2	1'-10"	4'-0"	7'-8"	2	3'-3"	4'-0"	10'-6"	1	3'-10"	4'-0"	11'-8"	1	54	2'-2"	1	3'-8"	4	65
30"	4'-6"	2	4'-11"	4'-6"	9'-5"	2	3'-10"	4'-10"	10'-7"	2	2'-4"	4'-6"	9'-2"	2	3'-8"	4'-6"	11'-10"	1	4'-7"	4'-6"	13'-8"	1	62	2'-8"	1	3'-8"	4	74
36"	5'-0"	2	5'-8"	5'-0"	10'-8"	2	4'-4"	5'-9"	12'-0"	2	2'-2"	5'-0"	9'-4"	2	3'-5"	5'-0"	11'-10"	2	5'-4"	5'-0"	15'-8"	1	76	3'-2"	1	3'-8"	5	90

MICHIGAN DEPARTMENT OF TRANSPORTATION

BUREAU OF HIGHWAY DEVELOPMENT STANDARD PLAN FOR

OUTLET HEADWALLS

11-17-2005	4-21-2005	R-85-D	SHEET
F.H.W.A. APPROVAL	PLAN DATE		2 OF 2